GuitarPCB Presents

MayTone Dual Combo

The NostalgiTone MayTone brings together two classic ingredients of '70s British guitar tone: the 70s Rangemaster Boost and the Diamond 30. The Boost takes the legendary Rangemaster concept further, with Range sweeping from classic treble-boost character to full-range response, while Heat gives you control over gain and saturation. The Diamond 30 adds the character of a British-style preamp, built around an active three-band EQ, with an internal TOP trimmer for fine-tuning its chime and sparkle.

The MayTone starts with the Boost pushing the Diamond 30, following the signal-chain arrangement associated with May's iconic tone into an AC30. But there's more to explore. The ORDER toggle lets you switch the position of the two circuits, putting the preamp before the boost and opening up an entirely different interaction between them. Two distinct signal-chain possibilities, and a wealth of tones to explore.



Order switching is built-in, with pin header connections making wiring a breeze.

Ideal for a 1590BB2 enclosure, featuring the same dimensions as a 1590BB but with 125B clearance for jacks.

Included with each Dual Combo purchase. – (2) Mainboards, (2) pin headers, (1) Dual wiring board.

70s Naga Boost (Rangemaster) Schematic

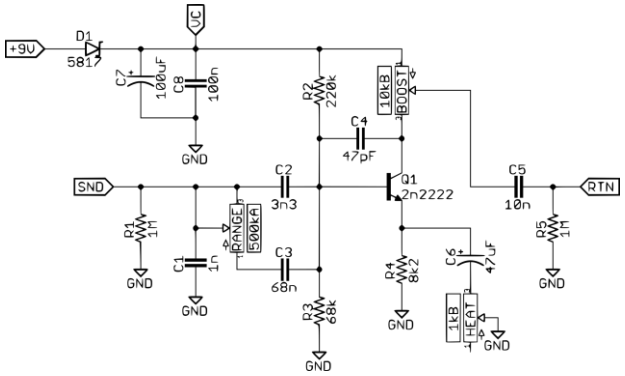

Part	Value	Part	Value	Part	Value
R1	1M	C2	3n3	LED	Status
R2	220k	C3	68n		
R3	68k	C4	47pF	Q1	2n2222
R4	8k2	C5	10n		
R5	1M	C6	47uF	RANGE	A500K
D1	1N5817	C7	100uF	BOOST	B10K
C1	1n	C8	100n	HEAT	B1K

Diamond 30 Schematic

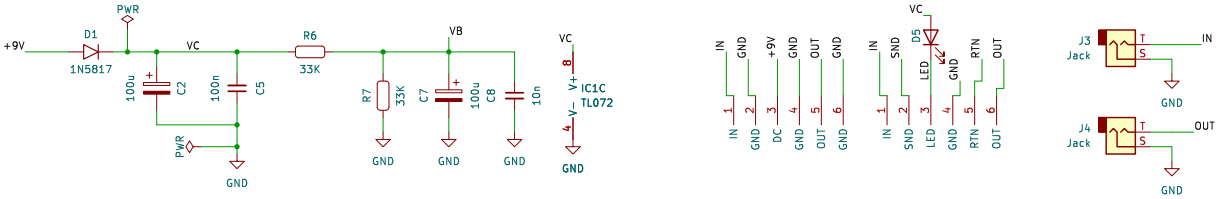

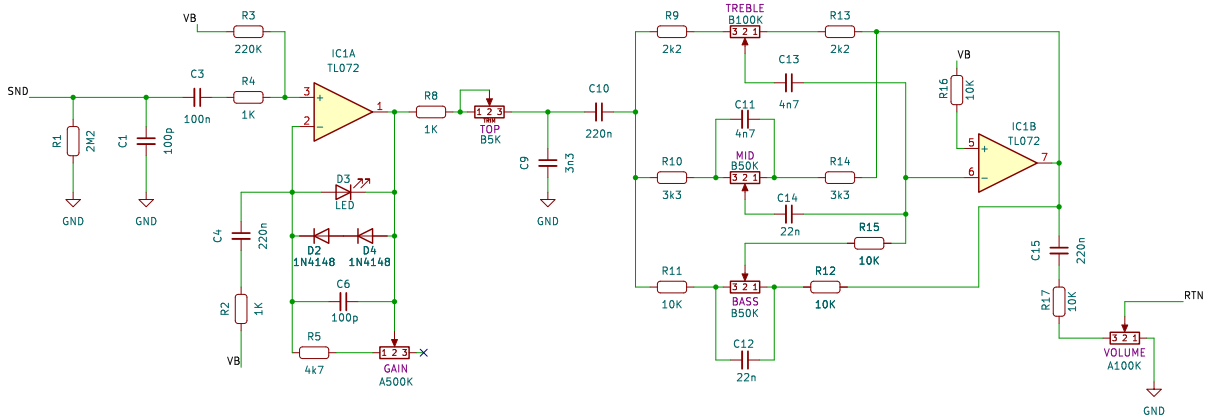

Bill of Materials

PART	VALUE	PART	VALUE	PART	VALUE	PART	VALUE
R1	2M2	R13	2k2	C7	100u	D3	RED LED
R2	1K	R14	3k3	C8	10n	D4	1N4148
R3	220K	R15	10K	C9	3n3	D5	Status LED
R4	1K	R16	10K	C10	220n		
R5	4k7	R17	10K	C11	4n7	IC1	TL072
R6	33K			C12	22n		
R7	33K	C1	100p	C13	4n7	TOP TRIM	B5K
R8	1K	C2	100u	C14	22n	VOLUME	A100K
R9	2k2	C3	100n	C15	220n	GAIN	A500K
R10	3k3	C4	220n			TREBLE	B100K
R11	10K	C5	100n	D1	1N5817	MID	B50K
R12	10K	C6	100p	D2	1N4148	BASS	B50K

Build Notes:

1. Solder the short side of both pin headers to the top of each main board, pointing upward. Next, solder all three switches, and (CLRs), to the dual wiring board. Crimp hang the LEDs (optional) if mounting to the dual wiring board.
2. Since the Dual PCB offers an additional LED Status location, you can choose your preferred setup. Whichever option you pick, solder a small jumper on the unused LED pads. (CLRs) are essential regardless of the installation choice.
3. Remove both nuts on each of the 3PDT foot switches for the best height match. Adjust the height of the Order Switch height adjustment nut so it is level with the foot switches (see photo next page). Do not over-tighten.
4. Install the Dual PCB by sliding it over both pin headers. Once the foot switches and toggle switch are secured correctly within the enclosure, proceed to solder the long side of the pin header to the dual wiring board. View or forum for other builder examples.
5. There are two (CLR) Current Limiting Resistors crucial to protect and adjust the brightness of their corresponding status LED. You may use a value of 1k8 (Bright) to 4k7 (Dim).
6. Do not use pot protectors with sidewalls for the EQ section. Use non-conductive backing instead to save space between pots.



Easy Pre-installation Height Adjustment

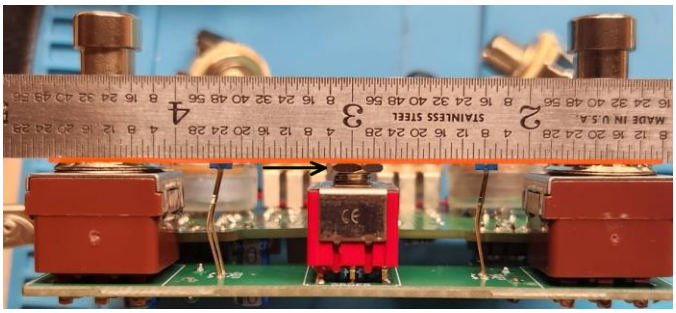

Easy Wiring Diagram

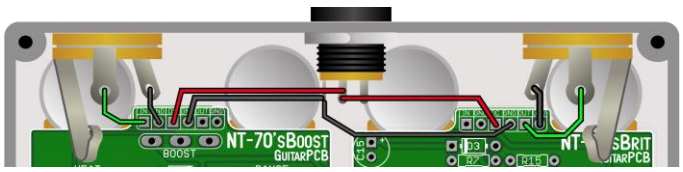

This Build Document, PCB, Artwork and Schematic image are property of ©GuitarPCB.com
All copyrights, trademarks and artworks remain the property of their owners.
Any company or product names used are for identification and educational purposes only.
GuitarPCB is in no way affilliated with any said companies and are not to be misrepresented.

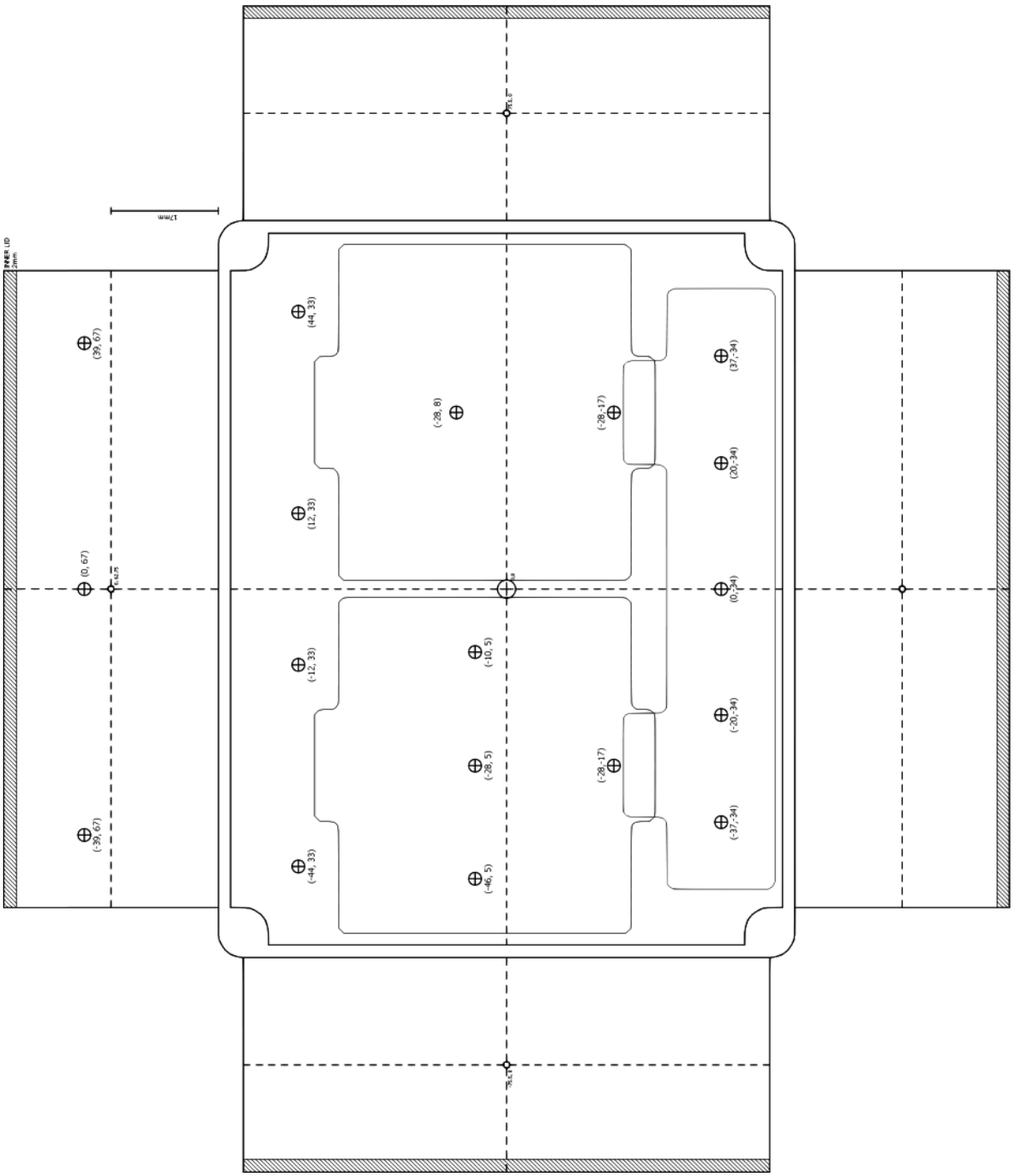

1590BB2 Drill Template

Drill only the holes required for your chosen project. LED holes can be located on either the wiring board or the main boards, giving you flexibility in how you lay out your build.

A link to a Tayda-drilled enclosure is available on the GuitarPCB Shop page. If you use the Tayda-drilled enclosure, both status LEDs must be installed on the dual wiring board.