GuitarPCB Presents

“2112” - Dual Combo

Introducing the “2112” Dual Combo that combines two iconic circuits to capture the legendary sound of RUSH’s early years. This Combo features the "Phaser" and "Plexamp" circuits, designed to work in perfect harmony to recreate the early tones of Alex Lifeson in RUSH.

The Phaser combines elements from several iconic designs, it achieves smooth transitions between phase shifts, enhancing modulation for an organic tone. The Phaser offers precise control over Rate, Intensity, Volume, and Voice, allowing you to fine-tune your sound like never before. Enjoy reduced noise levels for a cleaner audio experience.

The "Plexamp" circuit serves as a quality Marshall amplifier tone with excellent tone shaping controls. Going a step further, this circuit when used in tandem easily replicates many 70s sounds then reverse the order for an entirely different set of useful tones.

Key Feature:

- **Built-in order switching for endless tonal possibilities, to easily reverse the signal path. Use a “Stubby” or short bat switch.**

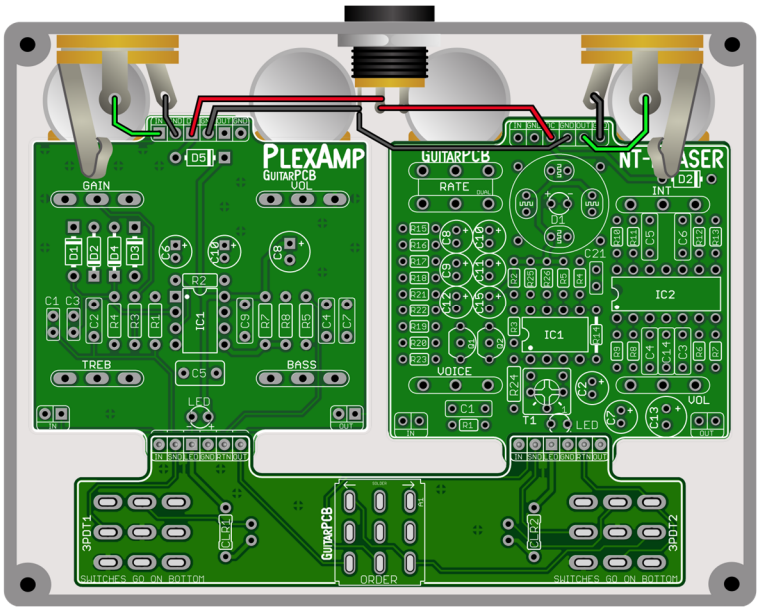

Order switching is built-in, with pin header connections making wiring a breeze.

Ideal for a 1590BB2 enclosure, featuring the same dimensions as a 1590BB but with 125B clearance for jacks.

Included with each Dual Combo purchase. – (2) Mainboards, (2) pin headers, (1) Dual wiring board.

Schematic Phaser:

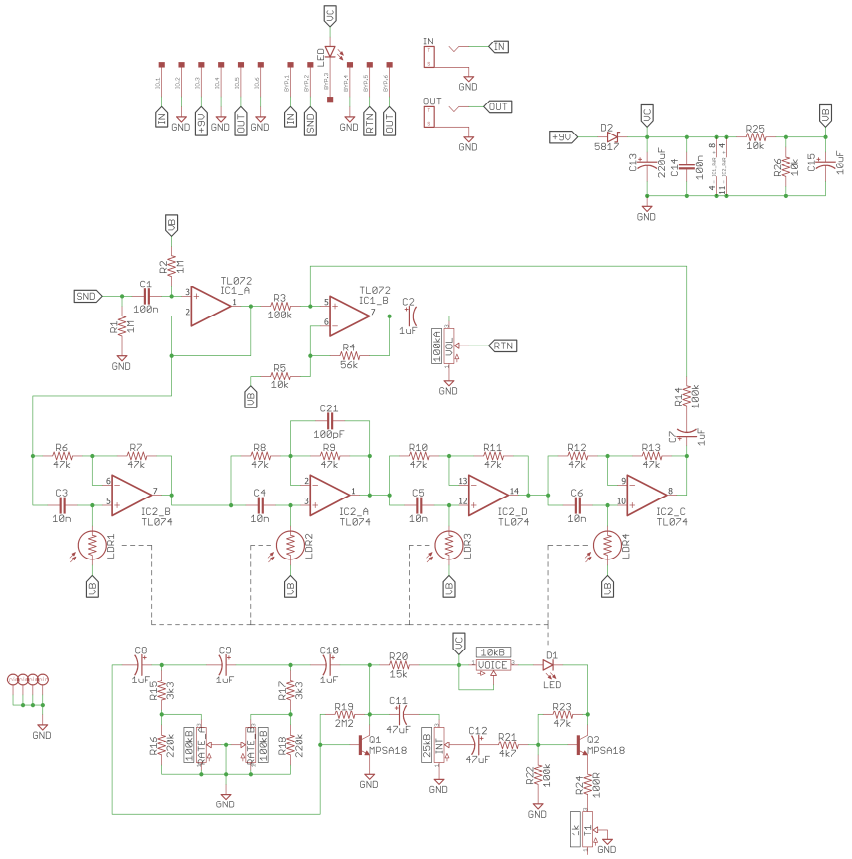

Schematic PlexAmp:

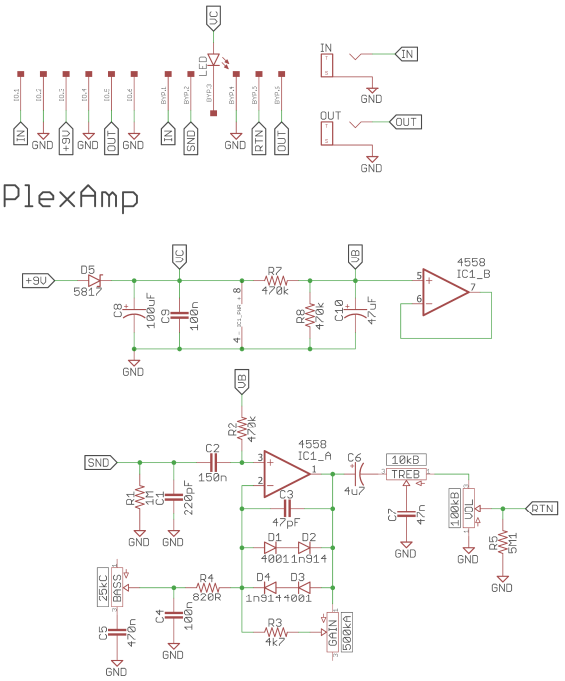

Bill of Materials Phaser:

Part	Value	Part	Value	Part	Value	Part	Value	Part	Value
R1	1M	R13	47k	R25	10k	C10	1uF	IC1	TL072
R2	1M	R14	100k	R26	10k	C11	47uF	IC2	TL074
R3	100k	R15	3k3			C12	47uF		
R4	56k	R16	220k	C1	100n	C13	220uF	T1	1K Trim
R5	10k	R17	3k3	C2	1uF	C14	100n		
R6	47k	R18	220k	C3	10n	C15	10uF	LDR 1 - 4	KE-1072
R7	47k	R19	2M2	C4	10n	C21	100pF	*CLR	1k8-4k7
R8	47k	R20	15k	C5	10n				
R9	47k	R21	4k7	C6	10n	D1	Status LED	INT	B25K
R10	47k	R22	100k	C7	1uF	D2	1N5817	RATE	B100K Dual
R11	47k	R23	47k	C8	1uF			VOL	A100K
R12	47k	R24	100R	C9	1uF	Q1 - Q2	MPSA18	VOICE	B10k

Bill of Materials PlexAmp:

Part	Value	Part	Value	Part	Value	Part	Value
R1	1M	C1	220pF	C9	100n	D1	1N4001
R2	470k	C2	150n	C10	47uF	D2	1N914
R3	4k7	C3	47pF	VOL	B100K	D3	1N4001
R4	820R	C4	100n	GAIN	A500K	D4	1N914
R5	5M1	C5	470n	BASS	C25K	D5	1N5817
R7	470k	C6	4u7	TREB	B10K		
R8	470k	C7	47n			LED	Status
		C8	100uF	IC1	4558	* CLR x1	1k8-4k7

* You'll need a 3PDT toggle switch On/On (solder lug version) with a short shaft (stubby) for order switching on the dual wiring board PCB.

Build Notes:

1. Solder the short side of both pin headers to the top of each main board, pointing upward. Next, solder all three switches, and (CLRs), to the dual wiring board. Dry hang the LEDs (optional) if mounting to the dual wiring board.
2. Since the dual wiring board offers an additional LED location for each circuit, you can choose your preferred setup. Whichever option you pick, solder a small jumper on the unused LED pads. (CLRs) are essential regardless of the location choice.
3. If you order the Tayda drilled enclosure with my link (see shop page) you must install the Status LEDs on the wiring board.
4. Remove both nuts on each of the 3PDT foot switches for the best height match. Adjust the height of the inner Order Switch adjustment nut so it is level with the foot switches' height relative to the enclosure. Do not over-tighten the outer Switch nut.
5. Install the wiring board by sliding it over both pin headers. Once the foot switches and toggle switch are tightened within the enclosure, proceed to solder the long side of the pin header to the dual wiring board.
6. * There are two (CLR) Current Limiting Resistors crucial to protect and adjust the brightness of their corresponding status LED. You may use a value of 1k8 (Bright) to 4k7 (Dim).

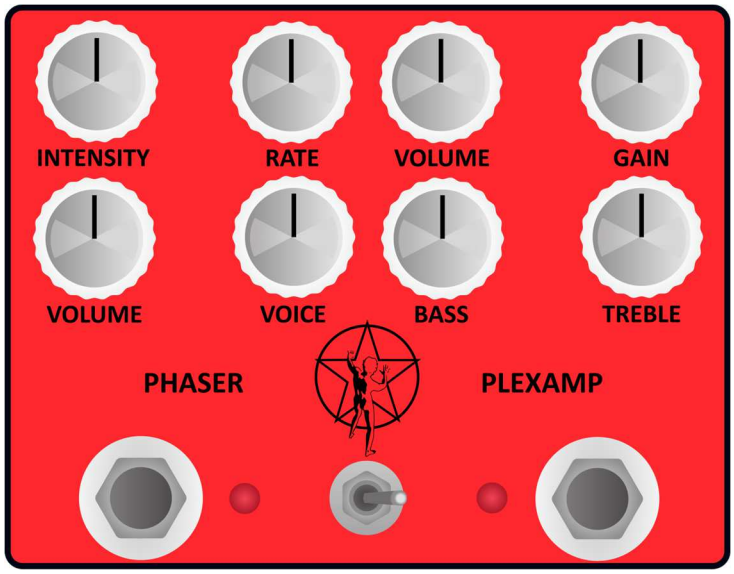

Order Switch Height Adjustment

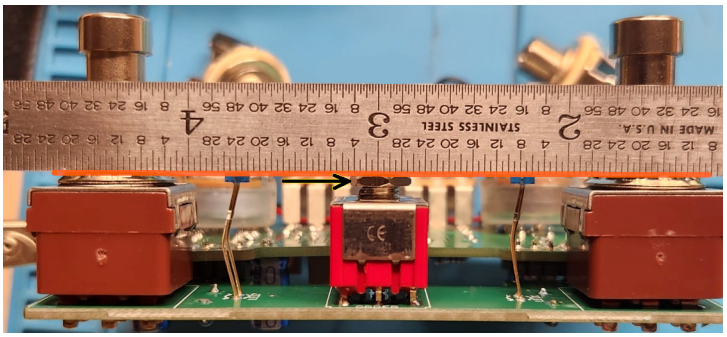

Easy Wiring Diagram

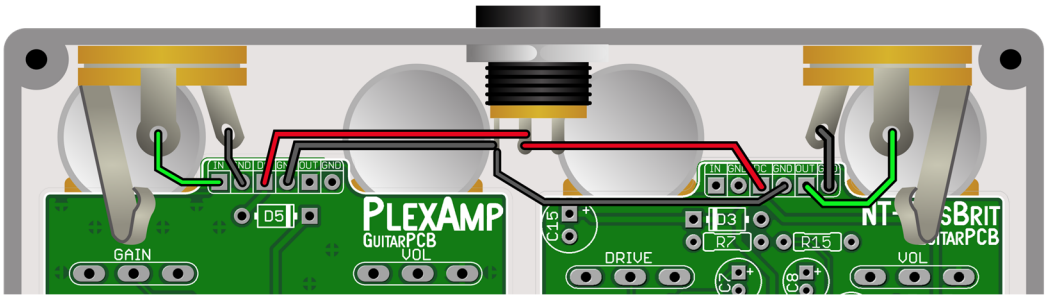

This Build Document, PCB, Artwork and Schematic image are property of ©GuitarPCB.com
All copyrights, trademarks and artworks remain the property of their owners.
Any company or product names used are for identification and educational purposes only.
GuitarPCB is in no way affilliated with any said companies and are not to be misrepresented.

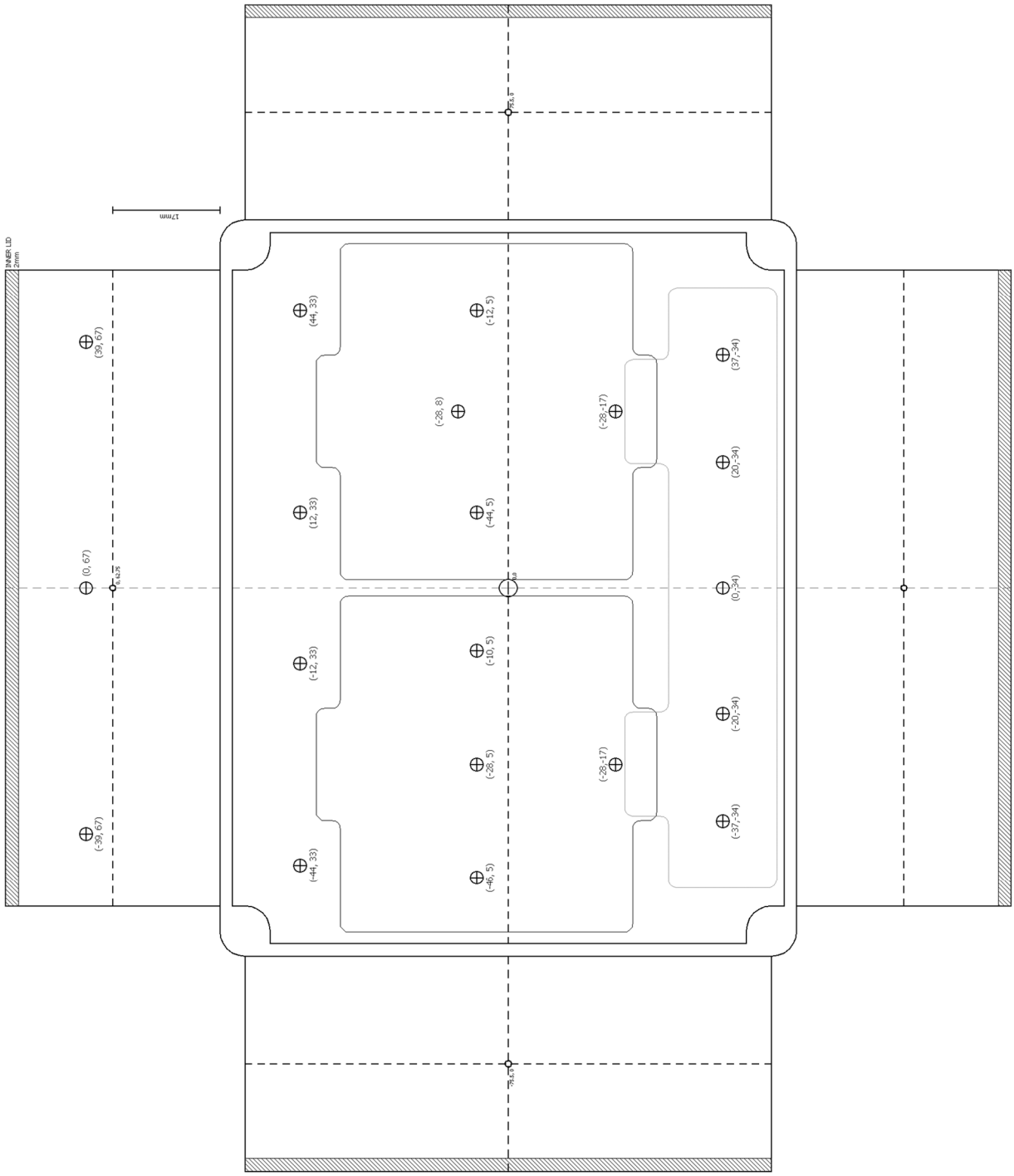

1590BB2 Drill Template

Note: The left section features drill holes for a five-knob and the right side is a three-knob circuit.

<u>Study the template</u> and drill only the holes you need for your project.

You can find a link to a Tayda Drilled enclosure on the GuitarPCB shop page. You must install both status LEDs on the dual wiring board only if you order the Tayda drilled enclosure.