Pump’d Up Fuzz Face v5 2021

P.U.F.F. - (A PNP Fuzz Face which uses a common Negative Ground Supply)

The Classic Fuzz Face with modern enhancements so it can be used with today’s pedal boards while not affecting the Vintage Tone of the original circuit. Old style PNP Fuzz Pedals were positive-ground circuits that required a separate power supply from the rest of the effects in a chain or a battery. To overcome this a charge pump chip has been integrated to allow our board to be powered by the same source as all of your other effects. Our Charge Pump will have (0) effect on the classic tone!

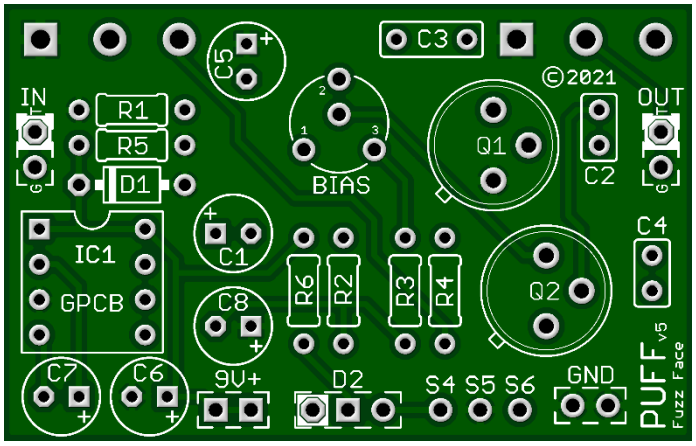

Part	Value
R1	1M
R2	33K
R3	330-470
R4	100K
R5	1M
R6	1k8
C1	2u2

Part	Value
C2	220p
C3	10n
C4	220p
C5	22u
C6	47u
C7	10u
C8	10u

Part	Value
VOL	A500K
FUZZ	B1K
BIAS	20K
D1	1N4001
D2	Status Led
IC1	7660S
Q1 - Q2	PNP

STATUS LED

***D2** is a Status LED that can be either a Bi-Color Common Anode or a Standard On/Off LED. (See Tip Sheet)

New in this GuitarPCB 2021 version release:

- Added all on-board potentiometers. Larger off-board wiring pads.
- Added extra +9v and Ground pads for “Combo Builds” allowing easy wiring options and connectivity.

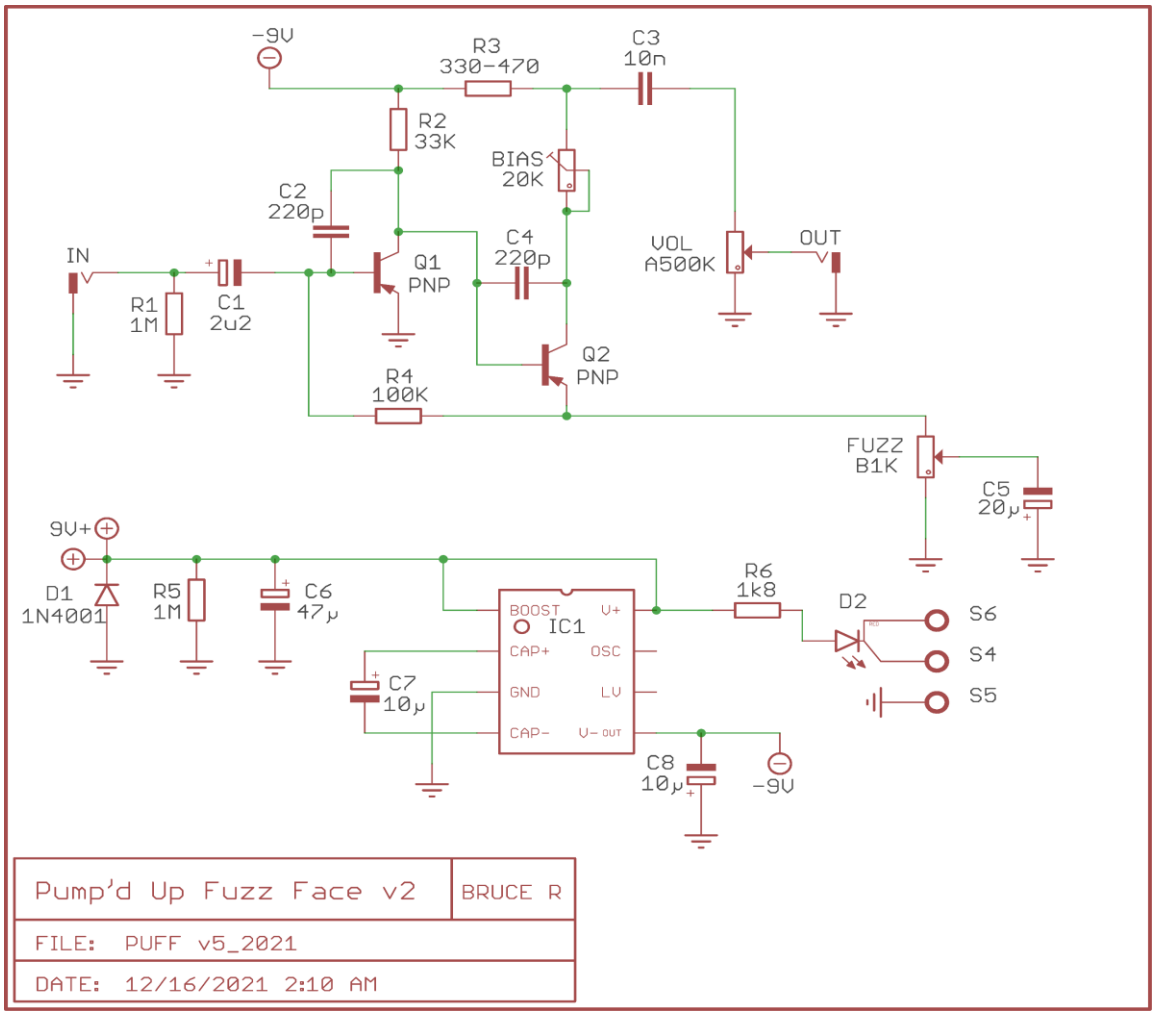

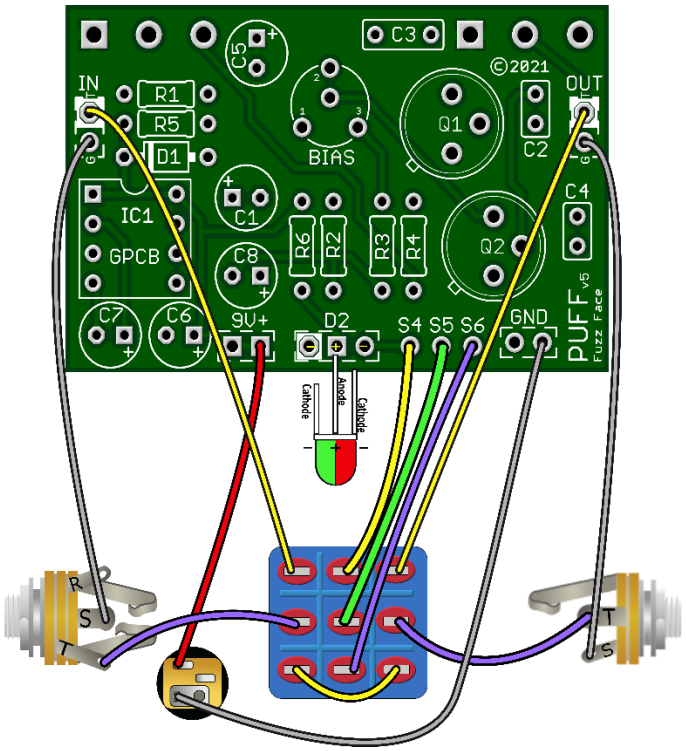

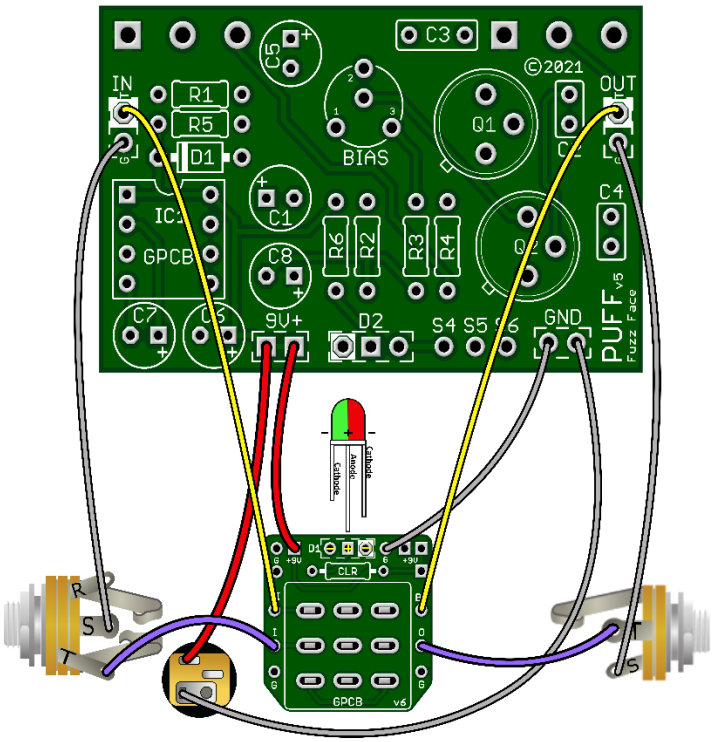

If you are using our 3PDT board, you should omit wires and parts from S4, S5 & S6, D2 and R6 (CLR).
The CLR and LED will be populated on the 3PDT board instead.

Be sure to read: [Technology of the Fuzz Face, by RG Keen](#).

Build Notes:

- Positive-Ground circuits cannot share a power adapter with negative ground pedals. A charge pump has been added to overcome this limitation. This is ideal for pedal boards that use daisy-chain power which contain multiple effects within a single enclosure. **Our Charge Pump will have (0) effect on the classic tone!**
- Use a charge pump with the 7660/1044 pin layout. We prefer the 7660S (TC7660**S**CPA). While all 1044 chips seem to have the boost feature, on the 7660 chips, the "S" designation after the number indicates that it has the frequency boost feature, whereas the original 7660 (without an "S") chips did not.
- The original Arbiter Fuzz Face pedals were equipped with NKT275, AC128, or SFT363E transistors, depending on what date the unit was manufactured. None of these are readily available today. These are a few of the types commonly used. **2n404**, 2n404A, 2n1305, 2n1307, 2n1309. Also try Silicon PNP Diodes **(Hendrix did.)**
- Transistors vary greatly regarding hFE gain values, leakage, etc. Some transistors may generate high-end hiss, which is not desirable. Our board includes **2 small capacitors** which were not in the original circuit, **C2** and **C4**. These act as a filter for hiss but do not affect the guitar signal or tone. You may also build without the hiss filters by simply not populating the board. If used we suggest recommended values of anything between 150-470pf.
- This circuit also contains modern features such as a dual power and ground pads for easy wiring of combo builds, reverse-polarity protection diode, and 2 pull-down resistors that discharge capacitors when the circuit is not in use. There is also a biasing trimmer resistor that is described in more detail in the next section.

Biasing - Mandatory for great tone.

In order to have this circuit sound like a Fuzz Face, you must correctly bias the circuit. This board uses a 20K-50K trimmer designed to help you adjust the bias perfectly to adjust for variances in transistors. To bias, adjust the trimmer until DMM reads negative 4.5-7.0 VDC on the **C**ollector of **Q2.** The variance in voltage will affect your preferred tone.

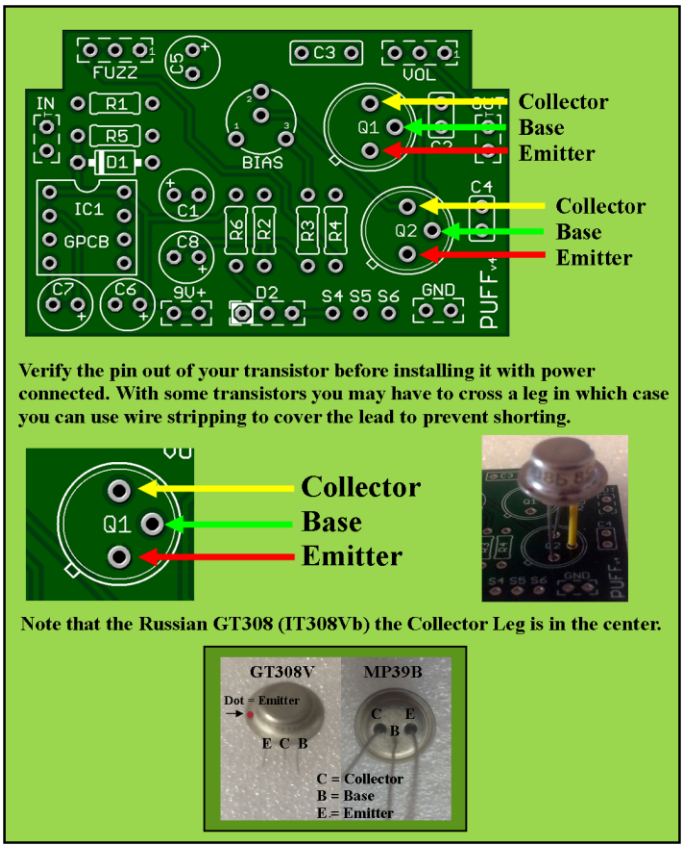

Drill Template

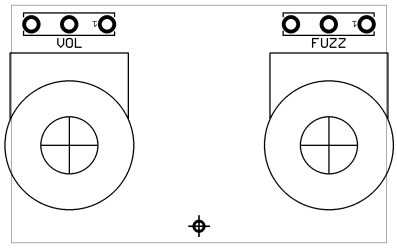

Drill Tips: Measure your components before selecting a drill bit. We recommend drilling the pot holes, mounting the pots in the enclosure, and then soldering the pots to the board. This approach should resolve the issue of the pots not fitting through the holes after soldering. We also recommend you make the holes for the pots a little larger than the threads in case you decide to remove the board and put it back in during the build, to avoid problems. Use this guide at your own risk. Make sure page scaling is turned off when you print this PDF, or the image above may be smaller than expected. Verify everything before drilling.

Populated Board for troubleshooting

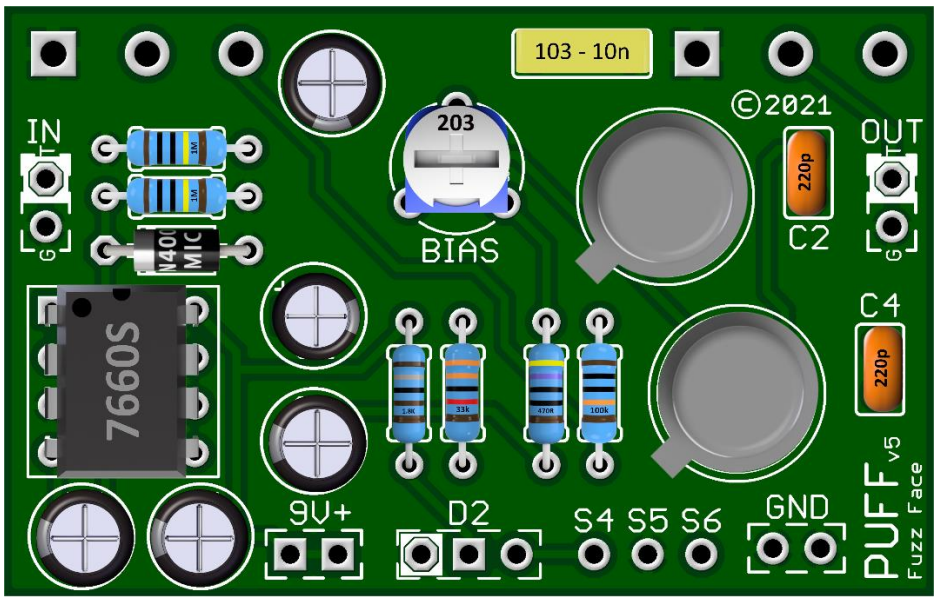

COLOR	1st Band	2nd Band	3rd Band	Multiplier	Tolerance
BLACK	0	0	0	1Ω	
BROWN	1	1	1	10Ω	±1%
RED	2	2	2	100Ω	±2%
ORANGE	3	3	3	1KΩ	
YELLOW	4	4	4	10KΩ	
GREEN	5	5	5	100KΩ	±0.5%
BLUE	6	6	6	1MΩ	±0.25%
VIOLET	7	7	7	10MΩ	±0.10%
GREY	8	8	8	100MΩ	±0.05%
WHITE	9	9	9	1GΩ	
GOLD				0.1Ω	±5%
SILVER				0.01Ω	±10%

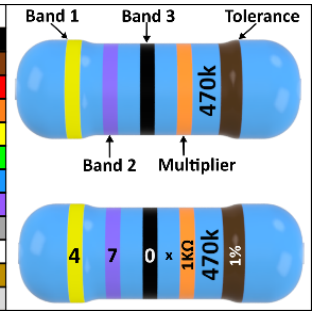

For more build guides and tutorials please visit the Guides Page at GuitarPCB.com
For specific build support please visit our dedicated Support Forum
Soldering Tutorial on YouTube

Need Kits - Check out our authorized worldwide distributors:

- **USA – Check out PedalPartsAndKits for all your GuitarPCB kit needs in the USA.**
- **Europe – Das Musikding Order either boards or kits direct from Europe.**
- **PedalPartsAustralia - Order either boards or kits direct from Australia**

GuitarPCB Tip Sheet

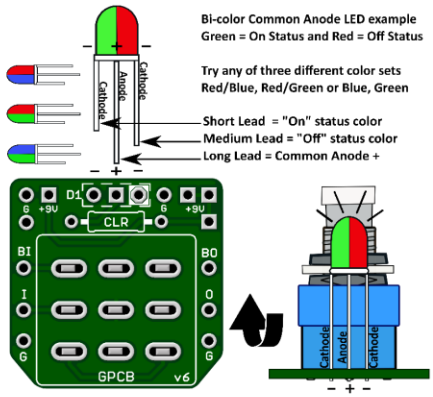

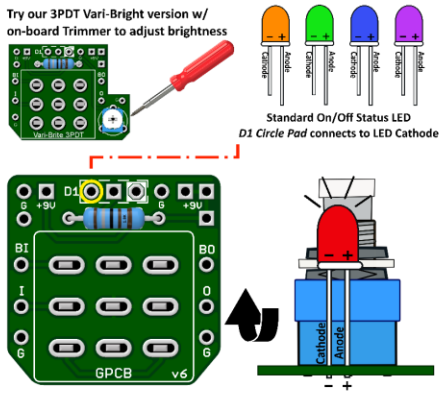

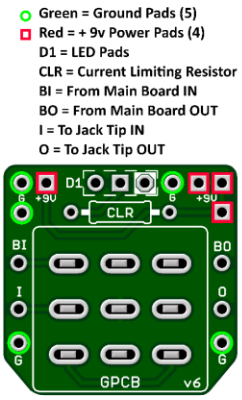

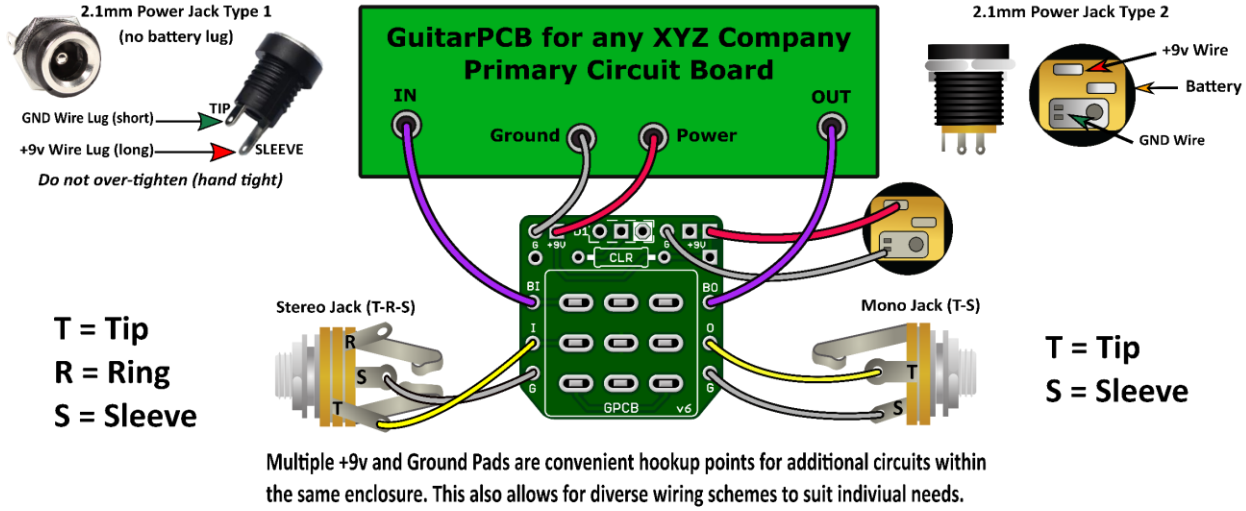

Multiple +9v and Ground Pads are convenient hookup points for additional circuits within the same enclosure. This also allows for diverse wiring schemes to suit indiviual needs.

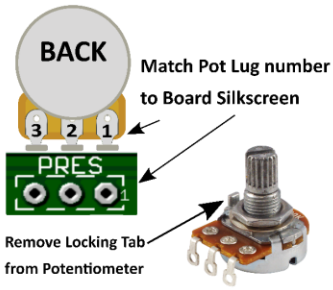

Sockets make troubleshooting easier

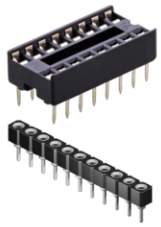

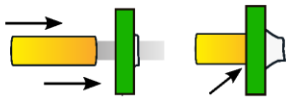

When soldering wire to a PCB push the protective PVC jacket flush with the board and pad.

Main Board IN/OUT Pads

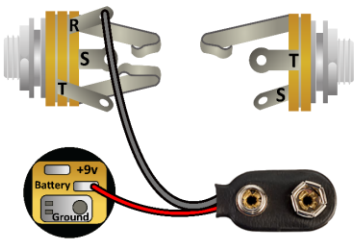

Input/Output Jack Wiring

T = Tip | R = Ring | S = Sleeve

A Stereo Jack is only needed if using a Battery. Otherwise use a Mono Jack
Battery Strap RED wire is connected to Power Jack
Battery Strap Black wire is connected to RING (stereo jack)
If wiring an LED to our 3PDT Wiring Board then S4, S5 & S6 are not needed

This Build Document, PCB, Artwork and Schematic image are property of ©GuitarPCB.com
All copyrights, trademarks and artworks remain the property of their owners.
Any company or product names used are for identification and educational purposes only.
GuitarPCB is in no way affilliated with any said companies and are not to be misrepresented.