Cranky Charles v1.1 2020

A British JCM800 style preamp with a 3-Band Baxandall Active EQ allowing you complete control over the tone. Turning the Drive up yields an aggressive distortion like you would expect from the real thing. Turn the Gain down, and dial in a variety of classic rock tones.

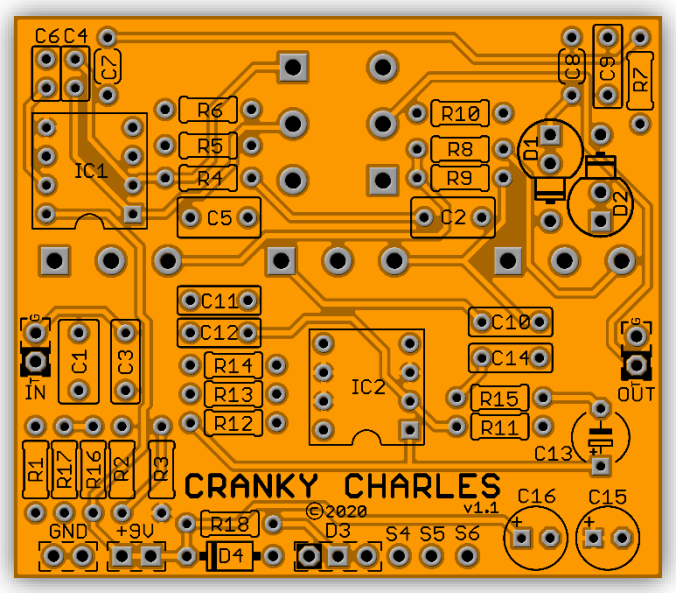

Board Dimensions (W x H) 2.25” x 1.95”

Bill of materials:

Part	Value
R1	1M
R2	1k
R3	1M
R4	*10k
R5	10k
R6	1M
R7	470R
R8	6k8
R9	2k2
R10	6k8
R11	68k
R12	2k2
R13	15k
R14	10k
R15	6k8
R16	22k

Part	Value
R17	22k
R18	1k8
C1	22n
C2	220n
C3	1n
C4	100p
C5	100n
C6	100p
C7	2u2
C8	2u2
C9	47n
C10	10n
C11	2n2
C12	10n
C13	2u2

Part	Value
C14	22n
C15	100u
C16	100u
D1	LED-5MM
D2	LED-5MM
D3	Status LED
D4	1n4001
IC1	*LM833
IC2	TL072
VOL	A100k
DRIVE	B100k
BASS	B25k
MID	B25k
TREBLE	B100k

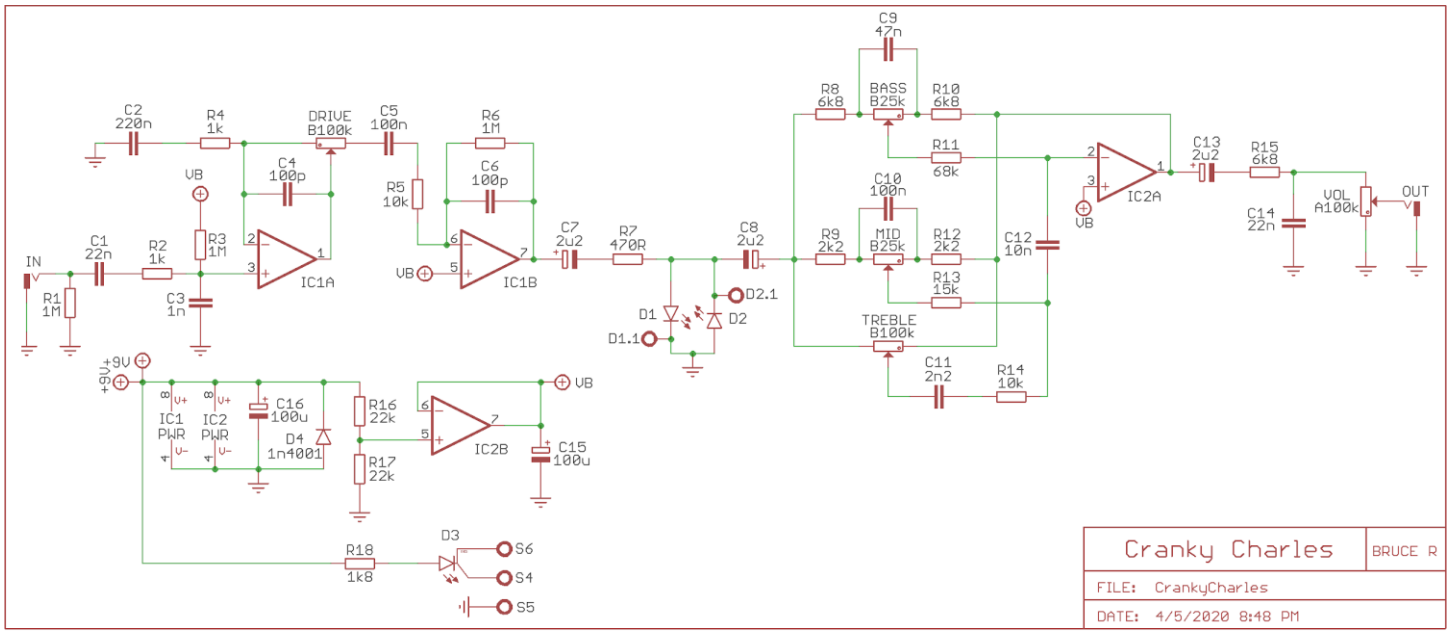

Build Notes:

- ***IC1 - LM833: Feel free to use TLO72 here as well.**
- ***R4 - We chose 10k here for those that like to turn everything to 10. Based on build variance, component choice and gear a lower value can cause squeal. The original value is 1k. Socket R4 if you want to try any value from 1k to 10k. 1k will produce more distortion. A great mod would be to put two values on one of our DPDT wiring boards. Stock / Hot**
- **Tone Controls: This is a Baxandall Tonestack, the same as used in our Tone TwEQ circuit. The three bands of the tone section are set up so it will be best for you to start with all three tone controls at the midpoint and adjust from there. You are sure to find a tonal setting that is just what you want!**

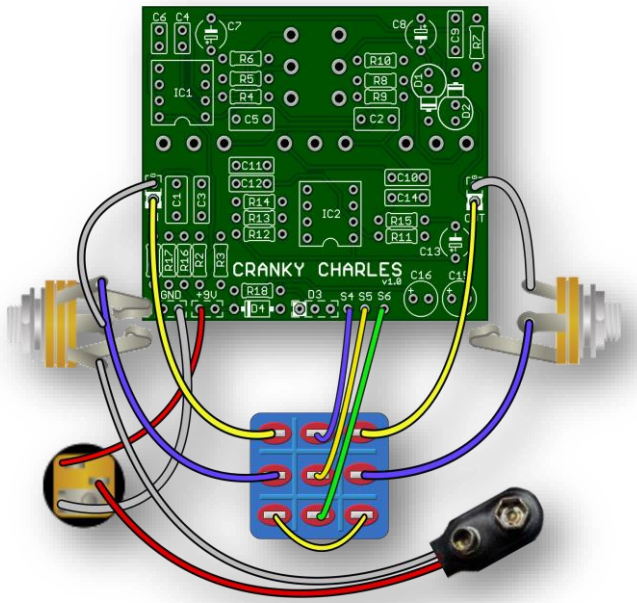

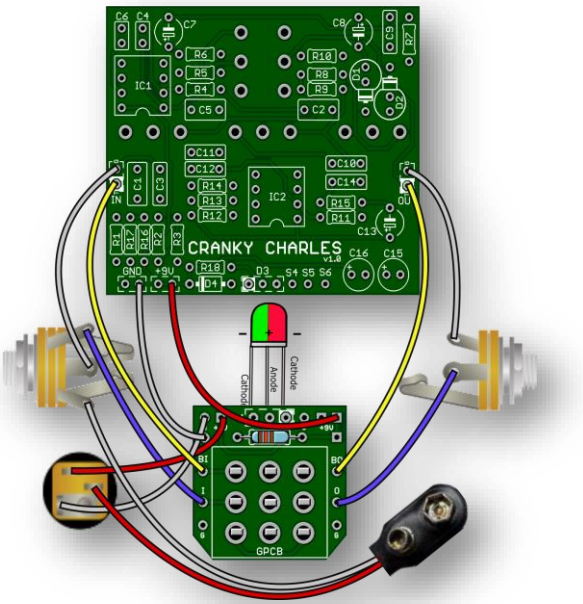

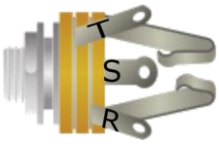

Be sure your In/Out Jack wiring is correct. A Stereo Jack (for battery use only) has a RING lug which is used to connect to the battery ground. If you do not intend to use a battery there is no need for a Stereo Jack. If using Stereo then only use the Tip and Sleeve lugs. S4, S5 & S6 is only needed when the LED is wired to the Main Board.

If using our convenient 3PDT Wiring Boards (below) here is an LED wiring guide. You may use Common Anode Bi-Color or Standard On/Off. The wiring boards use the same symmetrical layout as if wiring straight to the switch.

STATUS LED

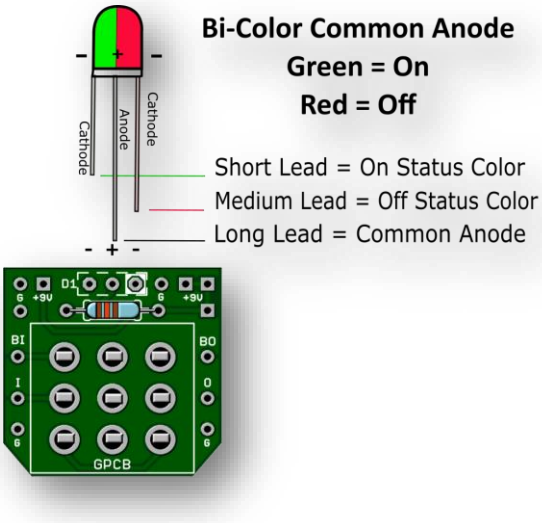

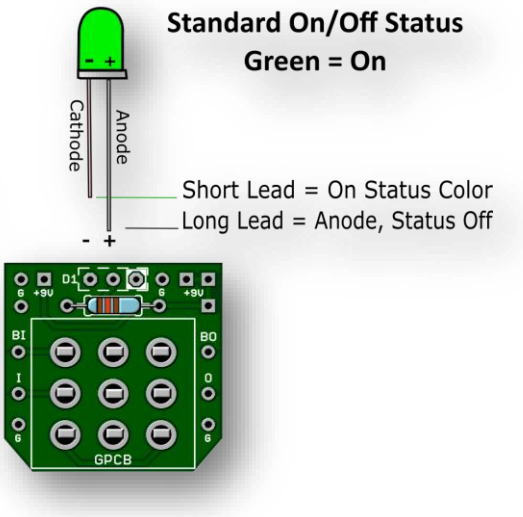

Note: If wiring the LED to our 3PDT board no need to connect S4, S5 & S6 or populate D3 or R18 (CLR) on the main board since you are wiring your LED directly to our board.

Direct Online Link: 3PDT Wiring Board Build Document

Drill Template: Drill at your own risk. Print at 300 resolution.

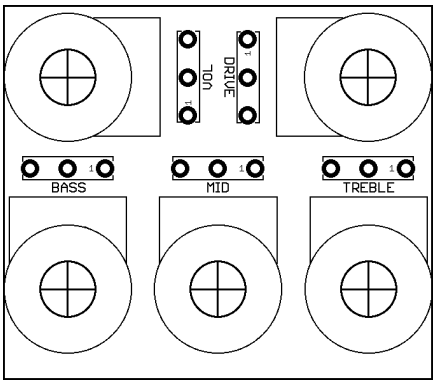

Drill Tips: Measure your components before selecting a drill bit. We recommend drilling the pot holes, mounting the pots in the enclosure, and then soldering the pots to the board. This approach should resolve the issue of the pots not fitting through the holes after soldering. We also recommend you make the holes for the pots a little larger than the threads in case you decide to remove the board and put it back in during the build, to avoid problems. Use this guide at your own risk. Make sure page scaling is turned off when you print this PDF, or the image above may be smaller than expected. Verify everything before drilling.

What is a Kenny Symbol?

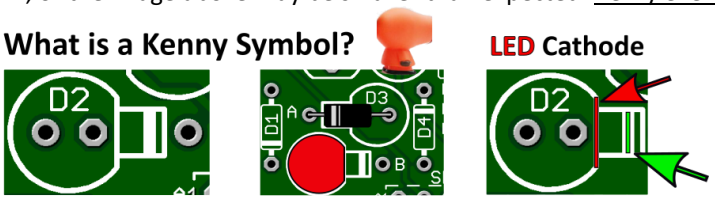

LED Cathode

3 Pads that can acommodate either LED, Silicon or Germanium Diodes

Stripe = Cathode

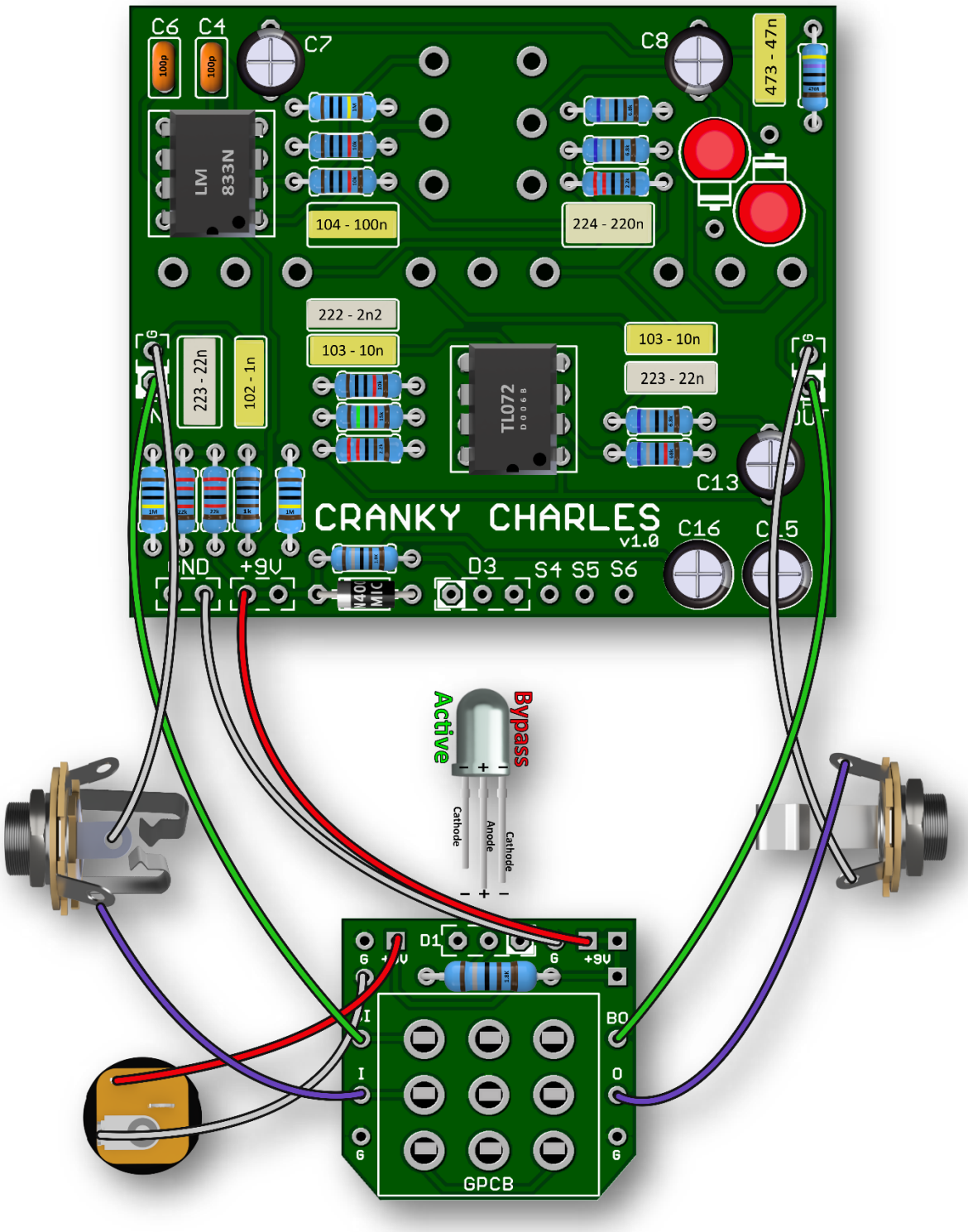

Before beginning any build or if you have questions please see our Guides Page on our site. The Guides Page is located in the Main Menu Bar of most pages. Also, we have a dedicated forum for questions about your build.

Soldering Tutorial on Youtube

Need a kit? Check out our authorized worldwide distributors:

USA – Check out PedalPartsAndKits for all your GuitarPCB kit needs in the USA.

Europe – Das Musikding Order either boards or kits direct from Europe.

PedalPartsAustralia - Order either boards or kits direct from Australia

If they do not have a KIT listed send them a note asking if they can help you out.

GuitarPCB Tip Sheet

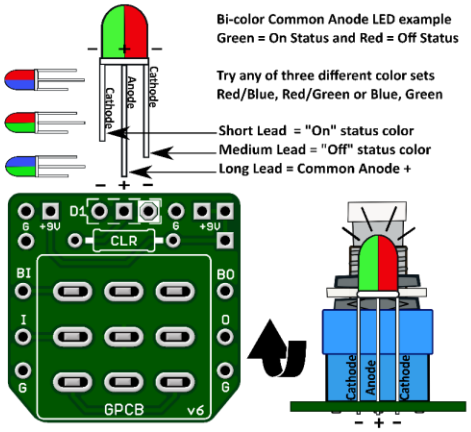

Bi-color Common Anode LED example
Green = On Status and Red = Off Status

Try any of three different color sets
Red/Blue, Red/Green or Blue, Green

Short Lead = "On" status color
Medium Lead = "Off" status color
Long Lead = Common Anode +

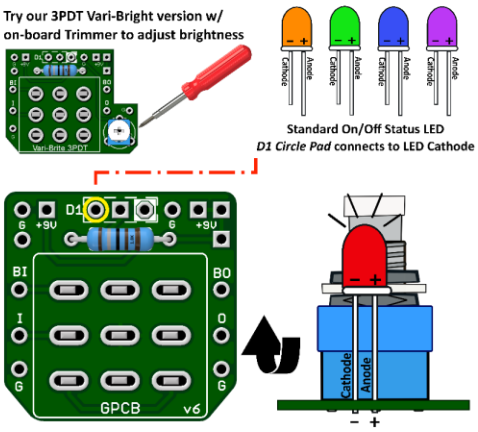

Try our 3PDT Vari-Bright version w/
on-board Trimmer to adjust brightness

Standard On/Off Status LED
D1 Circle Pad connects to LED Cathode

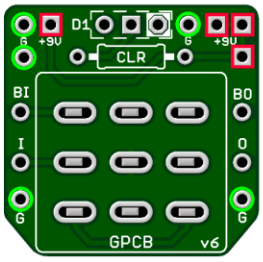

Green = Ground Pads (5)
Red = + 9v Power Pads (4)
D1 = LED Pads
CLR = Current Limiting Resistor
BI = From Main Board IN
BO = From Main Board OUT
I = To Jack Tip IN
O = To Jack Tip OUT

2.1mm Power Jack Type 1
(no battery lug)

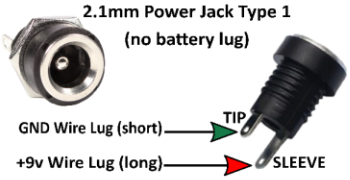

GND Wire Lug (short)
+9v Wire Lug (long)
Do not over-tighten (hand tight)

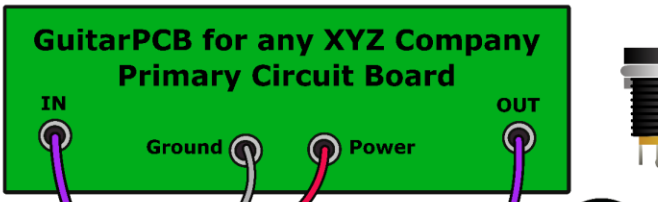

2.1mm Power Jack Type 2

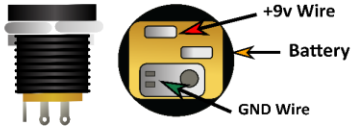

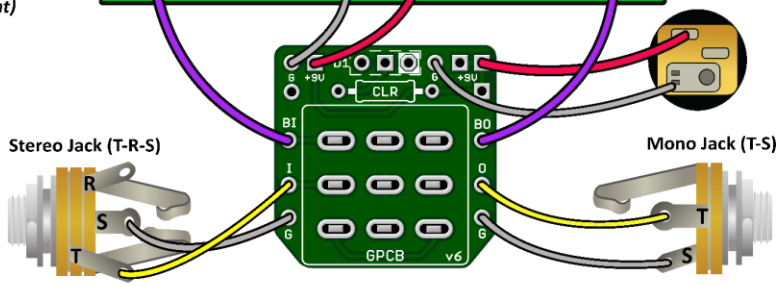

Stereo Jack (T-R-S)

Mono Jack (T-S)

T = Tip
R = Ring
S = Sleeve

T = Tip
S = Sleeve

Multiple +9v and Ground Pads are convenient hookup points for additional circuits within the same enclosure. This also allows for diverse wiring schemes to suit indiviual needs.

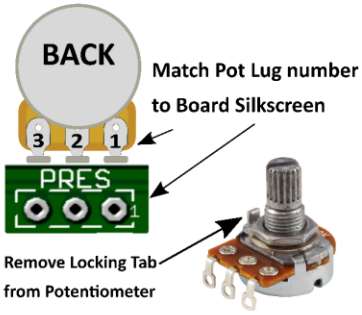

Match Pot Lug number
to Board Silkscreen

Remove Locking Tab
from Potentiometer

Sockets make troubleshooting easier

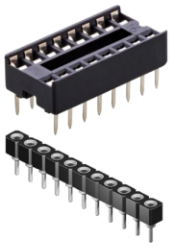

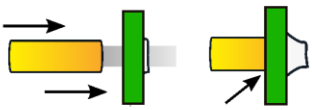

When soldering wire to a PCB
push the protective PVC jacket
flush with the board and pad.

Main Board IN/OUT Pads

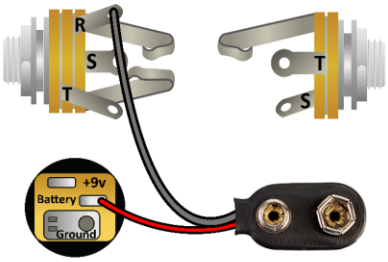

Input/Output Jack Wiring

T = Tip | R = Ring | S = Sleeve

A Stereo Jack is only needed if using a Battery. Otherwise use a Mono Jack
Battery Strap RED wire is connected to Power Jack
Battery Strap Black wire is connected to RING (stereo jack)
If wiring an LED to our 3PDT Wiring Board then S4, S5 & S6 are not needed

This Build Document, PCB, Artwork and Schematic image are property of ©GuitarPCB.com
All copyrights, trademarks and artworks remain the property of their owners.
Any company or product names used are for identification and educational purposes only.
GuitarPCB is in no way affiliated with any said companies and are not to be misrepresented.