GuitarPCB.com

Angry Llama Build Instructions

Based on one of the most popular DIY Builds the original Red Llama™ by Way Huge™. Our version also includes an added Gain Stage for those people want more available Gain (Distortion). We do this without sacrificing the original circuits unique tone by adding a clean stage at the end of the circuit. Furthermore, we used Gain mapping to make it when the Boost control is turned down full CCW you get the exact same great tone as the original Llama with the ability to add more Gain by turning the Boost control up CW from there. This will create more available distortion than the original circuit while preserving the character of the original. We have also added a Hot Switch at SW1. Use these options separately or together to adjust your final sound or set Boost to full CCW for stock tone.

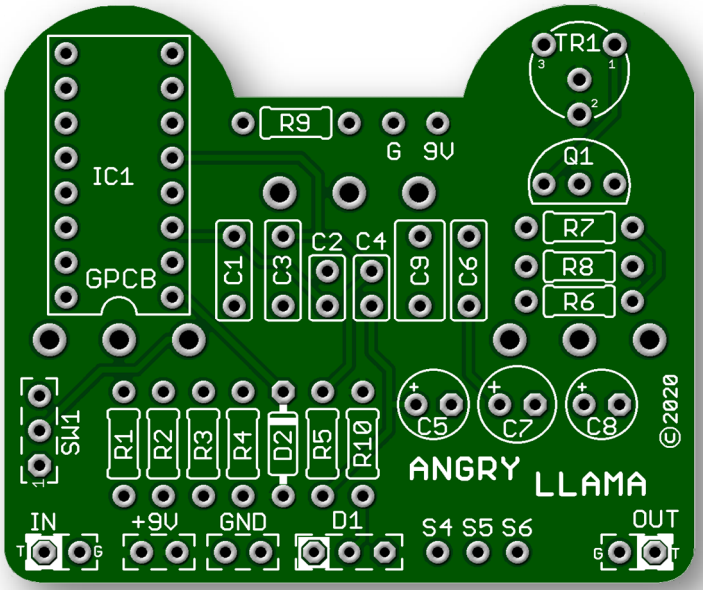

Board Dimensions (W x H) 1.95 x 1.65 inches

PARTS LIST

Part	Value
R1	1M
R2	100k
R3	330k*
R4	10M
R5	1M
R6	33k
R7	1M
R8	1k
R9	33k
R10	1k8

Part	Value
C1	68n
C2	100p
C3	33n
C4	100p
C5	10u
C6	100n
C7	100u
C8	22u
C9	220n
IC1	CD4049UBE

Part	Value
Q1	J113
LEVEL	A10k
GAIN	B1M
BOOST	A100k
D1	CA Status LED
D2	1n5817
SW1	SPDT ON-ON
TR1	20k

SCHEMATIC

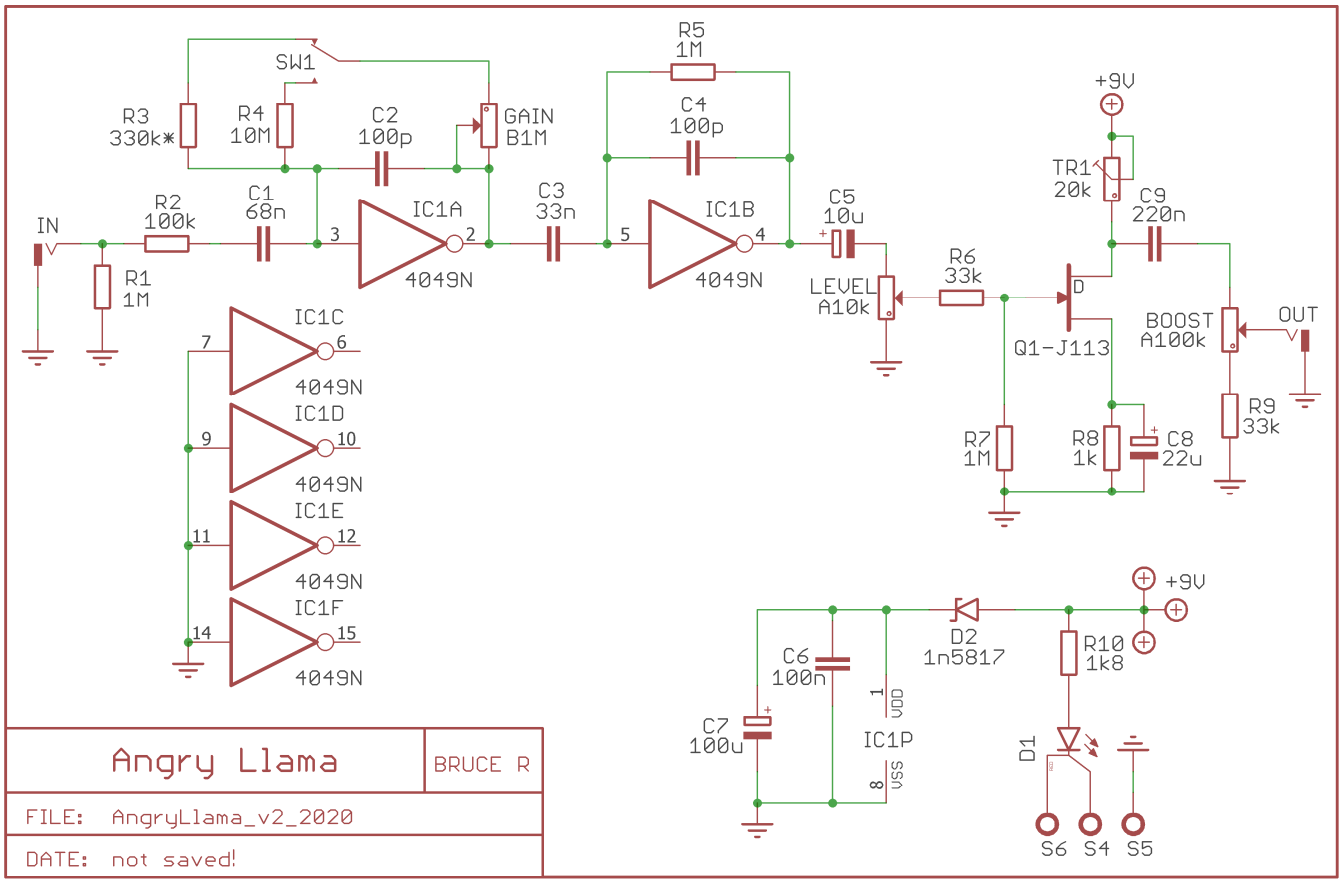

STATUS LED

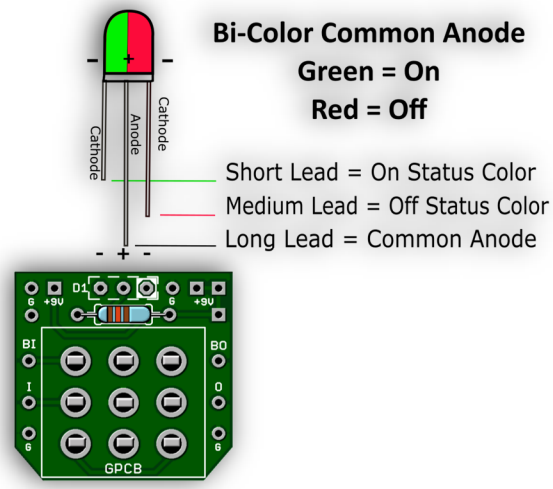

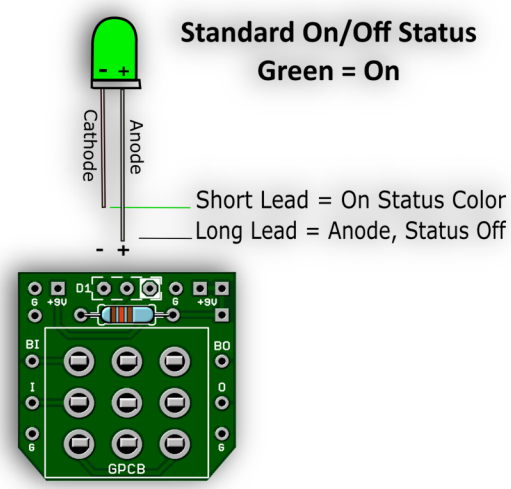

Note: If wiring the LED to our 3PDT board no need to connect S4, S5 & S6 or populate D2 or R28 (CLR) on the main board since you are wiring your LED directly to our board.

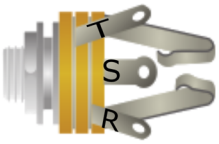

Be sure your In/Out Jack wiring is correct. A Stereo Jack (for battery use only) has a RING lug which is used to connect to the battery ground. If you do not intend to use a battery there is no need for a Stereo Jack. If using Stereo then only use the Tip and Sleeve lugs. S4, S5 & S6 is only needed when the LED is wired to the Main Board.

IMPORTANT NOTES

***R3/SW1** (Hot Switch) R3 can be anything between 100k and 1M, although a range of 270k to 330k is suggested. This affects the level of gain in one position of SW1. The lower you go, the more difference there will be between the 2 settings of the switch. Socket and try different values.

TR1 adjusts the **bias** of the Boost portion of the circuit. To set the bias, measure the voltage between the drain leg of Q1 and any ground. Set the trimmer so that this voltage is roughly 5v to 6.0V.

BOOST Control: The Boost is Off at full CCW then you can turn it up for extra Gain/Distortion.

WIRING DIAGRAM

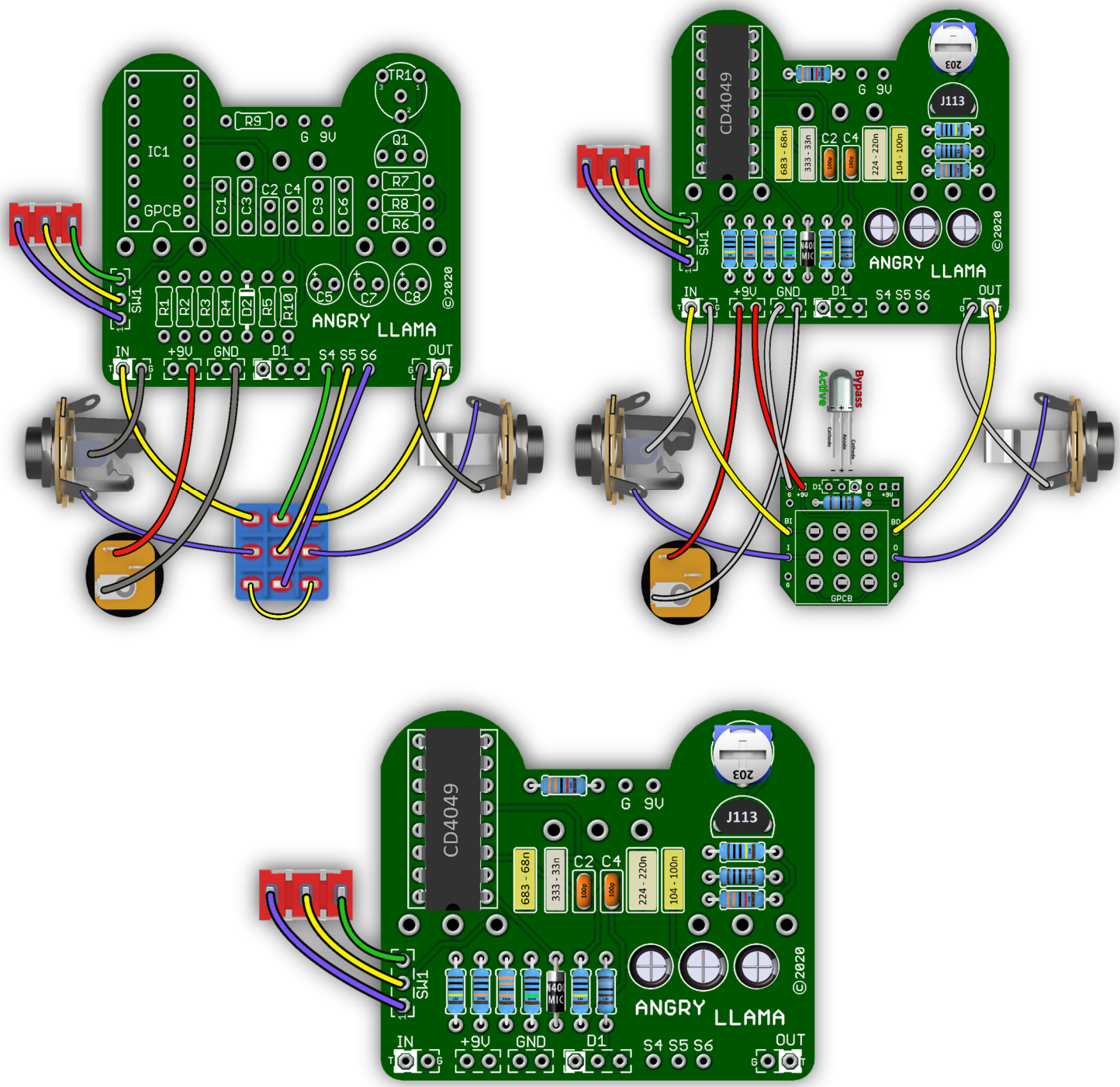

DRILLING GUIDANCE FOR POTS and LED

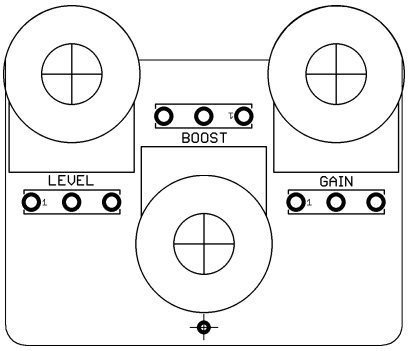

Drill Tips: Measure your components before selecting a drill bit. We recommend drilling the pot holes, mounting the pots in the enclosure, and then soldering the pots to the board. This approach should resolve the issue of the pots not fitting through the holes after soldering. We also recommend you make the holes for the pots a little larger than the threads in case you decide to remove the board and put it back in during the build, to avoid problems. Use this guide at your own risk. Make sure page scaling is turned off when you print this PDF, or the image above may be smaller than expected. Verify everything before drilling.

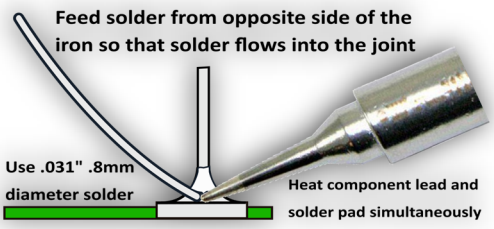

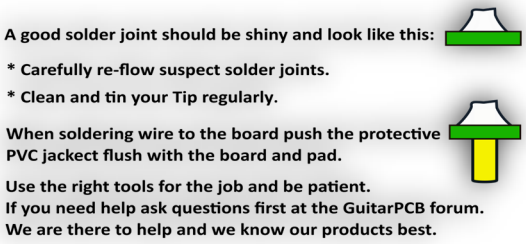

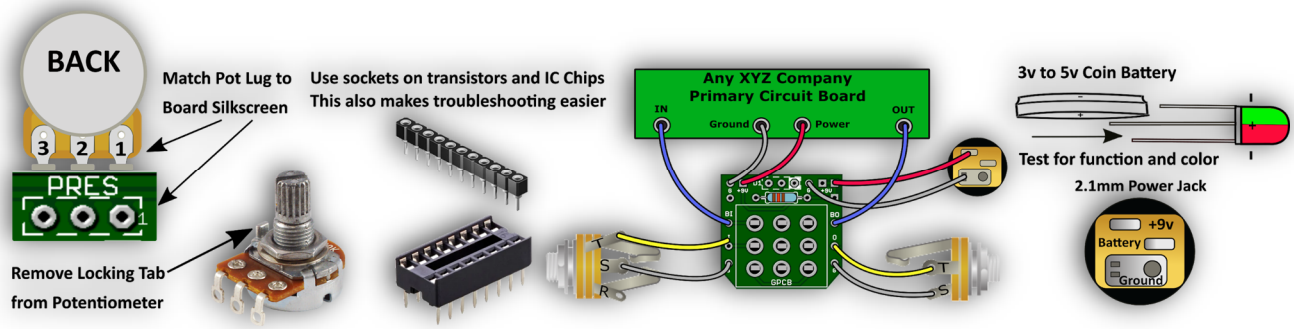

Need a kit?

USA – Check out PedalPartsAndKits for all your needs.

Europe – Das Musikding carries both boards and kits as a service to our Europeans friends.

Australia - PedalPartsAustralia.com carries GuitarPCB Boards and Kits direct.

This document, PCB, Artwork and Schematic Artwork © GuitarPCB.com. Schematic and PCB design by Bruce R. and Barry. Build Document by Bruce R. Wilkie1 and Barry. All copyrights, trademarks, and artworks remain the property of their owners. Distribution of this document is prohibited without written consent from GuitarPCB.com. GuitarPCB.com claims no rights or affiliation to those names or owners.