3PDT WIRING BOARD v4, v5 and v6

Older V4 version | **V5 version** | **NEW V6 2021**

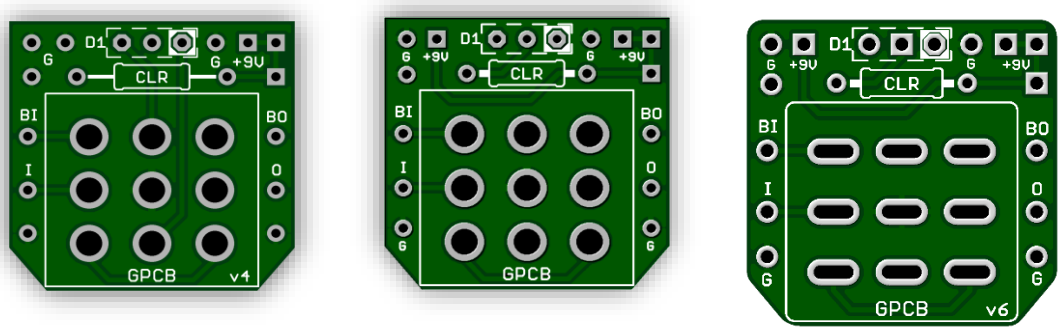

All Board Version Dimensions (W x H) .95” x .93”

The V6 version of our 3PDT Wiring Board is identical to V5 except that we have made the switch pads slotted. This will be handy when soldering to the switch and save you some solder as well.

There are many ways to use these boards to make your wiring easier, neater and more professional looking. This is the smallest profile 3PDT Wiring Board with the most available options including Bicolor or Standard Status LED available.
The Foot switch is intended to be soldered to the back of the 3PDT Wiring board.

The Board is labeled as follows:

G	**Ground pads, five in total**
+9V	**+9V supply, four in total**
BI	**Wiring from the Main Circuit Board Input**
I	**Wiring from the Input Jack Tip**
O	**Wiring to the Output Jack Tip**
BO	**Wiring from the Main Circuit Board Output**
D1	**Common Anode LED (Bi-Color) or Standard On/Off Status**
CLR	**Current Limiting Resistor - Use 1K8 (max Bright) to 4k7 (dim)**

Status LED Wiring (Bicolor or Standard): The value of the **CLR** (Current Limiting Resistor) is not too critical. A value of 1k8 to 4k7 is suggested as this offers a good trade-off between LED brightness and current drawn. Choose values between 1k8 (very bright, more current) and 4k7 (dim, less current). **Do not use 9v direct or it will blow the LED.**

TOP **SIDE** **BACK**

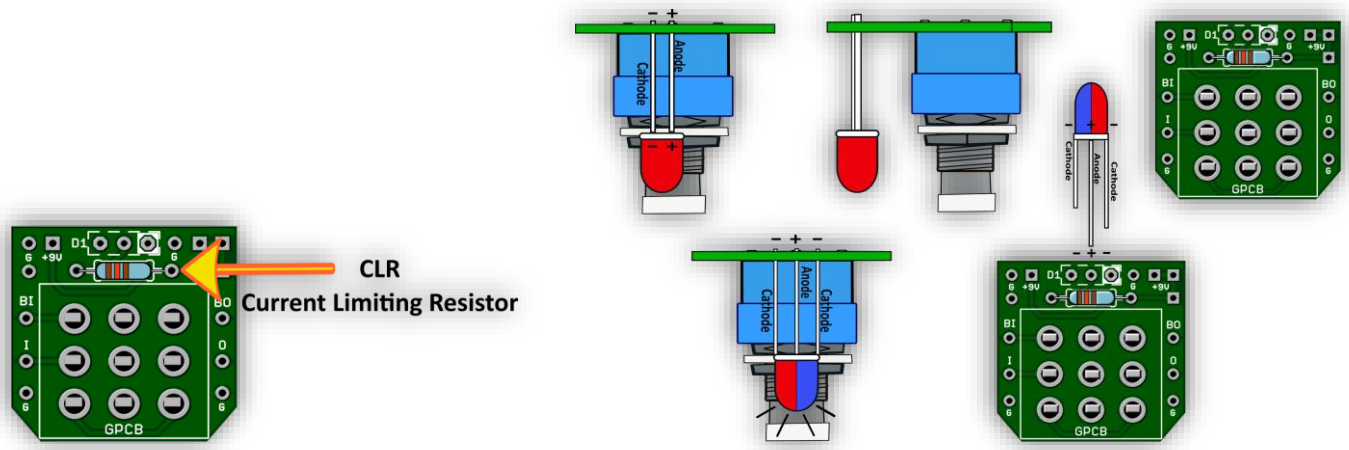

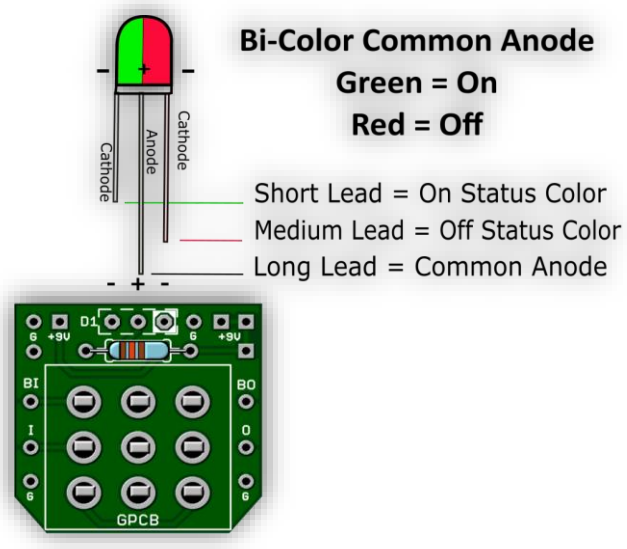

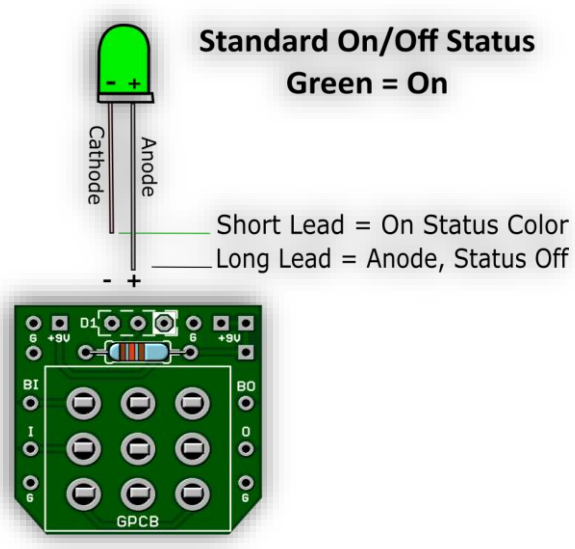

Insert the LED leads into the corresponding pads as shown in the previous example.
TIP: Use a 3v to 5v coin battery to test your LED before installing. Note: 9v direct without a CLR will blow the LED.

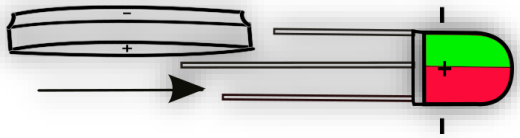

Using a **Red / Green LED** and wired as per the wiring diagram, the LED will light red showing that power is applied to the circuit board and the switch is in bypass mode, it will light green when the switch is in effects mode.

GuitarPCB sells a common anode Bi-Color LED in Red / Green, Red/Blue and Blue Green in our Shop.

Wiring
The +9v pad is connected to the +ve power supply jack while the other +9v pad can be used to run power to the Main circuit board or add-on board. As long as the 3PDT Wiring board is grounded by the Power Supply Jack any of the ground pads may also be used to share a common ground.

Note: While we show the wiring going in through the top of our boards for wiring clarity, we actually prefer to route the wire from underneath the 3PDT board, soldering from the top before soldering the finished piece to the foot switch.

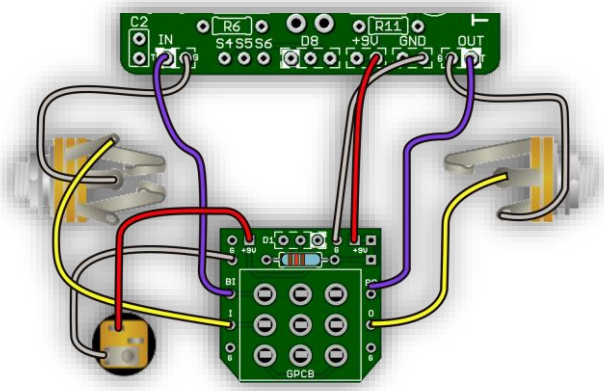

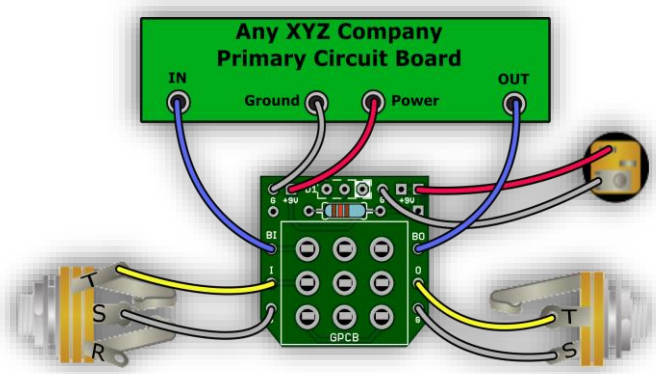

Pay close attention to your Jack Lugs when wiring. A Stereo Jack (required for battery only) has a RING lug which is used to connect to the battery ground. If you do not intend to use a battery there is no need for a Stereo Jack.
If all you have is a Stereo Jack then only use just the Tip and Sleeve lugs.

T = Tip - R = Ring - S = Sleeve

GuitarPCB 3PDT Wiring Board Advantage

3PDT Wiring Boards work with both Standard On/Off Or Common Anode Bi-Color Status LEDs

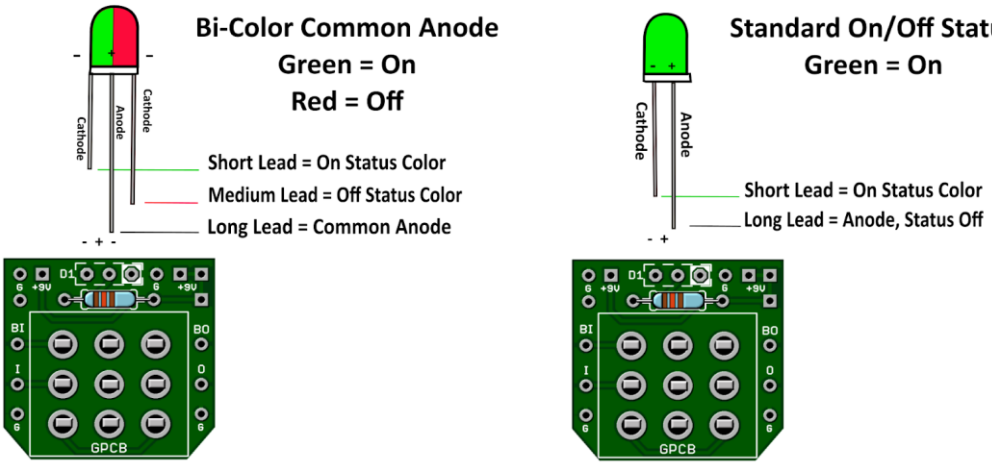

Insert the LED leads into the corresponding pads as shown above. If you wish to change the color of the On Status then simply flip the LED to change to the cathode of the color you wish to use.
TIP: Use a 3v to 5v coin battery to test your LED before installing. Note: 9v direct will blow the LED.

3PDT Wiring Board Features

- Works with Standard On/Off or Bi-Color Status LED
- (4) Power Pads for connecting power to add-on boards
- (5) Ground Pads perfect for add-ons and combo builds
- LED is board mountable for a firm enclosure connection
- Pads symmetrical to enclosure means short, neat wiring
- Eliminate "Star Grounding" utilizing circuit board copper

Board Symbols

- G = Ground
- 9v = Power Supply Pads (3)
- BI = Wiring to Main Circuit Board In
- BO = Wiring to Main Circuit Board Out
- I = Wiring to Input Jack Tip
- O = Wiring to Output Jack Tip
- Blank Pads = Extra Grounds (No Star Grounding!)
- CLR = Current Limiting Resistor for LED (2k to 4k7)
- D1 = Wiring Board Mounted LED (Standard or Bi-Color)

GREEN = Ground Red = Power

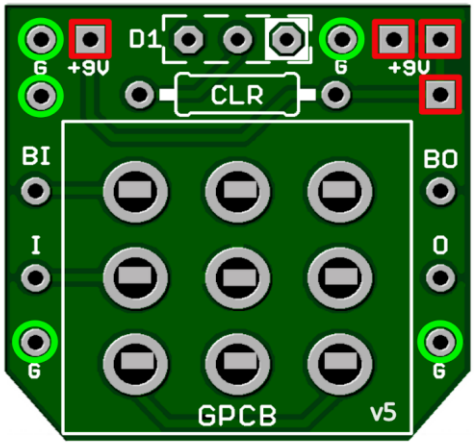

There is no lower profile wiring board, with as many features! The best available with 9 years of enhancements!
All wiring in the Audio Path is routed on the side away from power connections for low noise operation.

Low Profile only .95″ x .93″ Note: If using a Standard LED place the Anode Leg in the center pad of D1 then place the Cathode Leg in the (non-white pad) to the left of it. Many extra pads for connecting add-on boards.

Easy "Combo Build" wiring using our 3PDT Wiring Boards for sharing Power, Ground & Audio with no need to double up on any lugs.

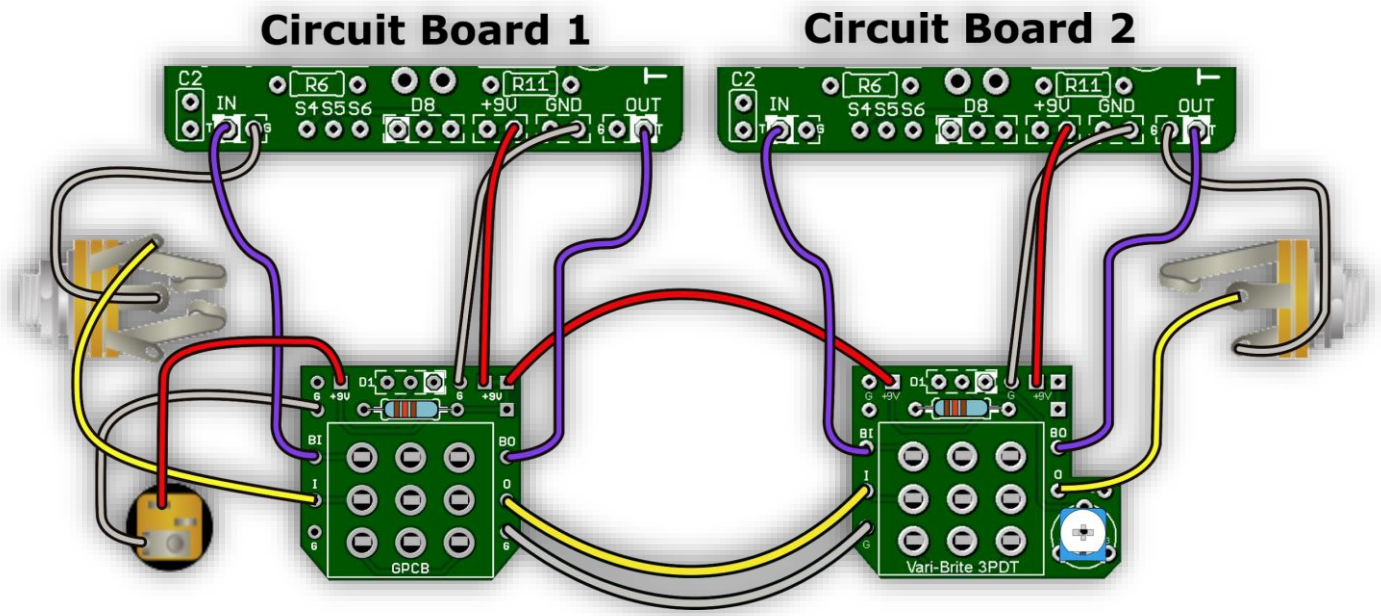

Check out our latest
The "Vari-Brite"
3PDT Board w/ LED Dimmer

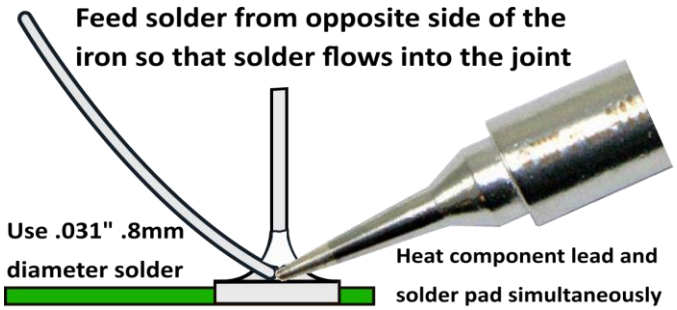

A good solder joint should be shiny and look like this:

*** Carefully re-flow suspect solder joints.**

*** Clean and tin your Tip regularly.**

When soldering wire to the board push the protective PVC jackect flush with the board and pad.

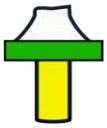

Use the right tools for the job and be patient.
If you need help ask questions first at the GuitarPCB forum.
We are there to help and we know our products best.

Need a kit?

USA – Check out PedalPartsAndKits for all your needs.
Europe – Das Musikding carries both boards and kits as a service to our Europeans friends.
Australia - PedalPartsAustralia.com carries GuitarPCB Boards and Kits direct.
If they do not have a KIT listed send them a note asking if they can help you out.

Soldering Tutorial on Youtube

Before beginning any build or if you have questions please see our Guides Page on our site.