Best Ever - O.D.

Based on the Brown Sound tones found in the Friedman BE-OD™ amplifier. This circuit has a variety of tone controls that will let you easily dial in your sound. In addition to Bass, Treble and Presence controls just like the amp this circuit features a Tight control allowing you to incrementally remove any unwanted loose bottom end that may not appeal to your particular style. An on-board trimmer feature allows you to set the Gain Range to suit your playing style as well.

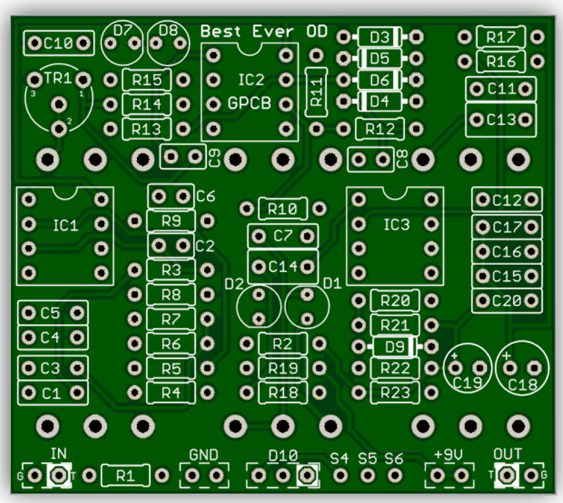

Board Dimensions (W x H) 2.25” x 1.95”

Part	Value
R1	1M
R2	470k
R3	10k
R4	22k
R5	39k
R6	4k7
R7	10k
R8	22k
R9	22k
R10	22k
R11	22k
R12	220k
R13	10k
R14	10k
R15	2k2
R16	33k
R17	33k
R18	10k
R19	1k8*

Part	Value
R20	10R
R21	10k
R22	10k
R23	2k2
C1	22n
C2	47p
C3	10n
C4	1n
C5	100n
C6	47p
C7	47n
C8	120p
C9	100p
C10	10n
C11	4n7
C12	22n
C13	220n
C14	220n
C15	100n

Part	Value
C16	100n
C17	100n
C18	100u
C19	22u
C20	100n
D1,D2	Red LED-3mm
D3-D6	1N4148
D7, D8	Red LED-3mm
D9	1N5817
D10	BiColor CA LED
IC1-IC3	TL072
BASS	C100k
GAIN	B1M
PRES	C10k
TIGHT	C100k
TREB	B100k
VOL	A50k
TR1	*30k

Build Notes: TR1 can be increased to 50k or even 100k for more available Gain however this can cause more noise or even oscillation if you start turning controls to their maximum settings. 30k achieves excellent Brown Sound tones.

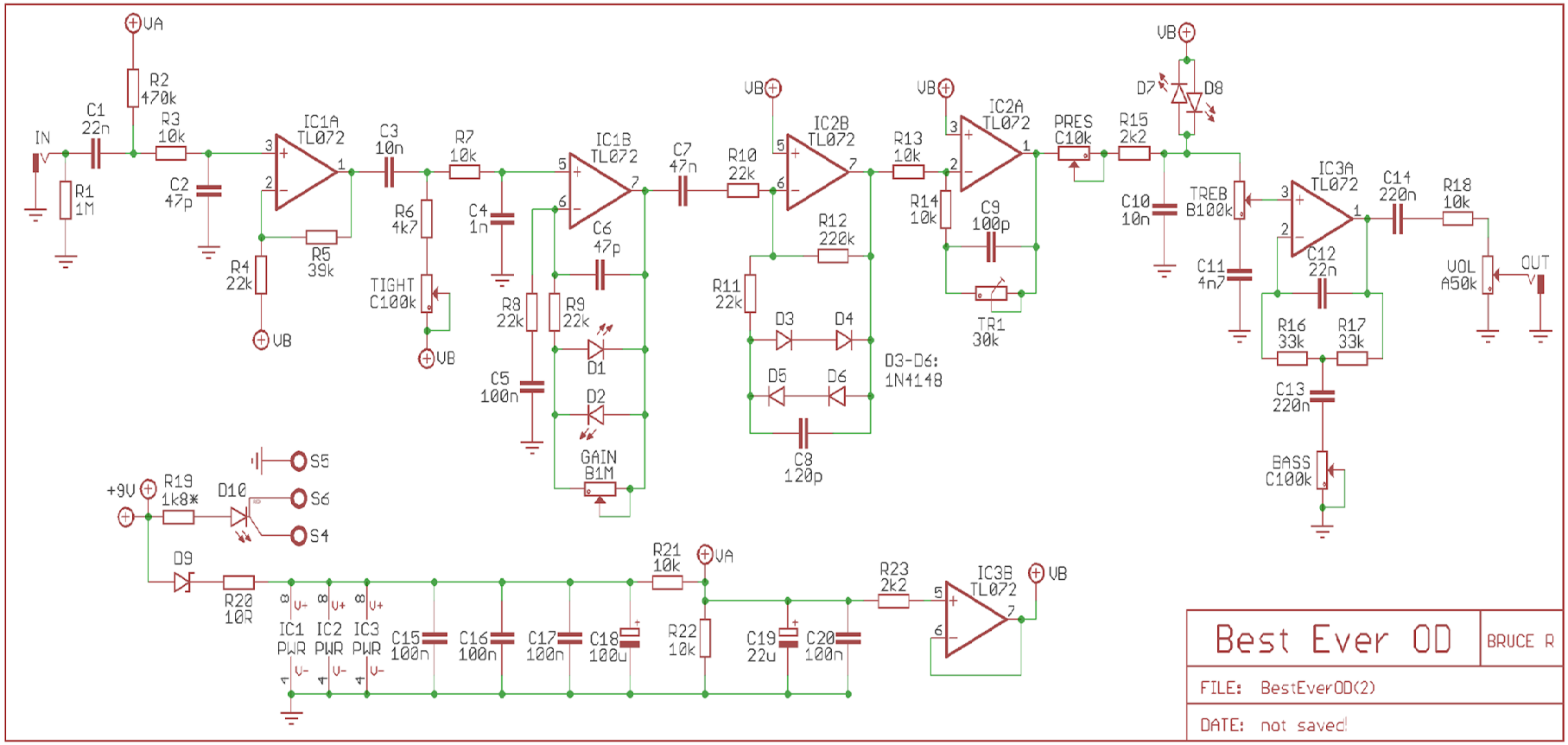
Best Ever OD
BRUCE R
FILE: BestEverOD(2)
DATE: not saved
IN
OUT
VA
VB
+9V
IC1A TL072
IC1B TL072
IC2A TL072
IC2B TL072
IC3A TL072
IC3B TL072
R1 1M
R2 470k
R3 10k
R4 22k
R5 39k
R6 4k7
R7 10k
R8 22k
R9 22k
R10 22k
R11 22k
R12 220k
R13 10k
R14 10k
R15 2k2
R16 33k
R17 33k
R18 10k
R19 1k8*
R20 10R
R21 10k
R22 10k
R23 2k2
C1 22n
C2 47p
C3 10n
C4 1n
C5 100n
C6 47p
C7 47n
C8 120p
C9 100p
C10 10n
C11 4n7
C12 22n
C13 220n
C14 220n
C15 100n
C16 100n
C17 100n
C18 100u
C19 22u
C20 100n
D1
D2
D3
D4
D5
D6
D7
D8
D9
D10
D3-D6: 1N4148
TIGHT C100k
GAIN B1M
PRES C10k
TR1 30k
TREB B100k
BASS C100k
VOL A50k
S4
S5
S6
IC1 PWR
IC2 PWR
IC3 PWR

See our [“Guides Page”](#) for more detailed information on building guitar pedals. Use this Standard Wiring Diagram below. This diagram can be used on all GuitarPCB builds.

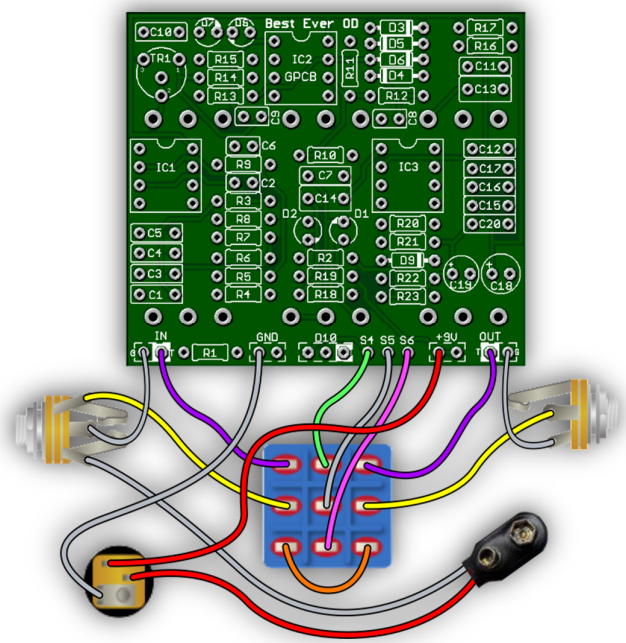

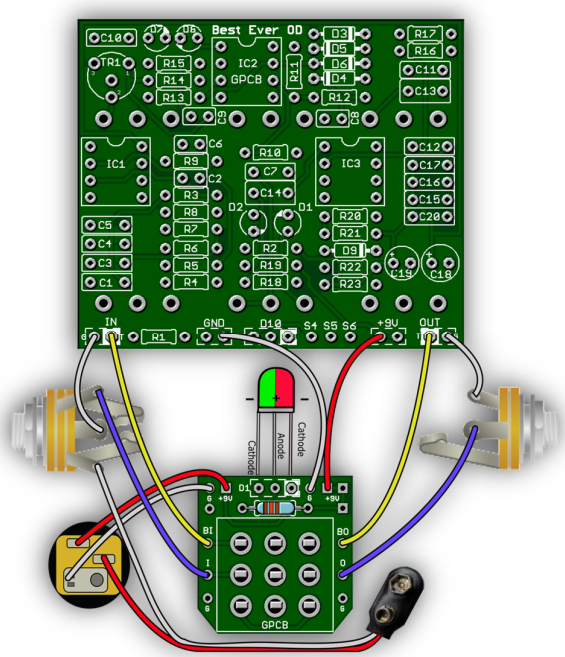

Be sure your In/Out Jack wiring is correct. A Stereo Jack (for battery use only) has a RING lug which is used to connect to the battery ground. If you do not intend to use a battery there is no need for a Stereo Jack. If using Stereo then only use the Tip and Sleeve lugs. S4, S5 & S6 is only needed when the LED is wired to the Main Board.

If using our convenient 3PDT Wiring Boards (below) here is an LED wiring guide. You may use Common Anode Bi-Color or Standard On/Off. The wiring boards use the same symmetrical layout as if wiring straight to the switch.

<u>STATUS LED</u>

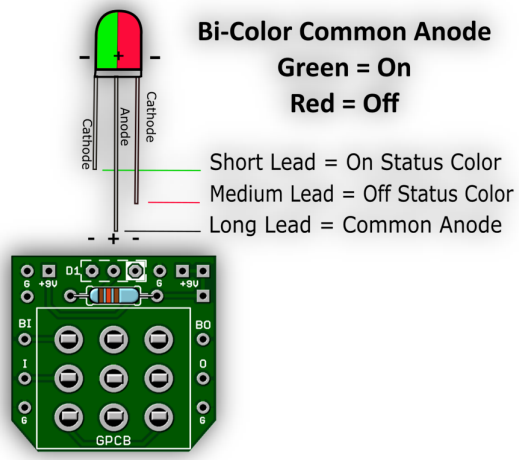

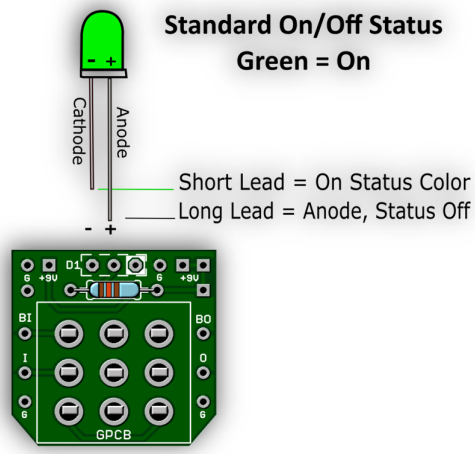

Note: If wiring the LED to our 3PDT board no need to connect S4, S5 & S6 or populate D2 or R28 (CLR) on the main board since you are wiring your LED directly to our board.

Direct Online Link: [3PDT Wiring Board Build Document](#)

Populated board example: Always use sockets and only solder pots while they are in the enclosure holes so you do not have to bend the leads adding stress to make them fit. We have included dual power and ground pads for easy combo building. This is a GuitarPCB special feature.

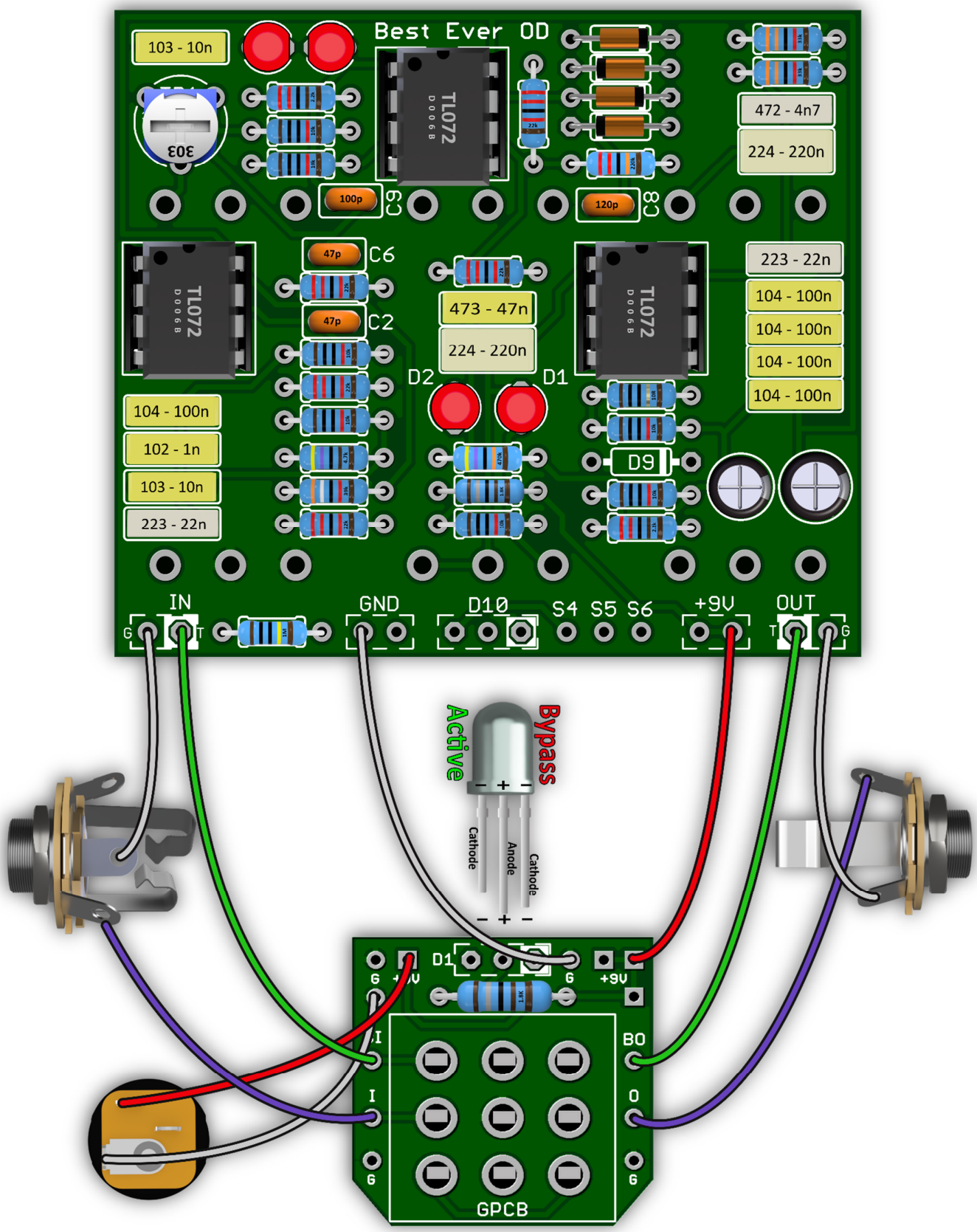

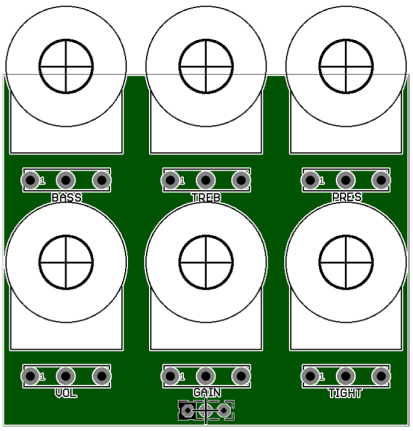

Drill Tips: Measure your components before selecting a drill bit. We recommend drilling the pot holes, mounting the pots in the enclosure, and then soldering the pots to the board. This approach should resolve the issue of the pots not fitting through the holes after soldering. We also recommend you make the holes for the pots a little larger than the threads in case you decide to remove the board and put it back in during the build, to avoid problems. Use this guide at your own risk. Make sure page scaling is turned off when you print this PDF, or the image above may be smaller than expected. Verify everything before drilling.

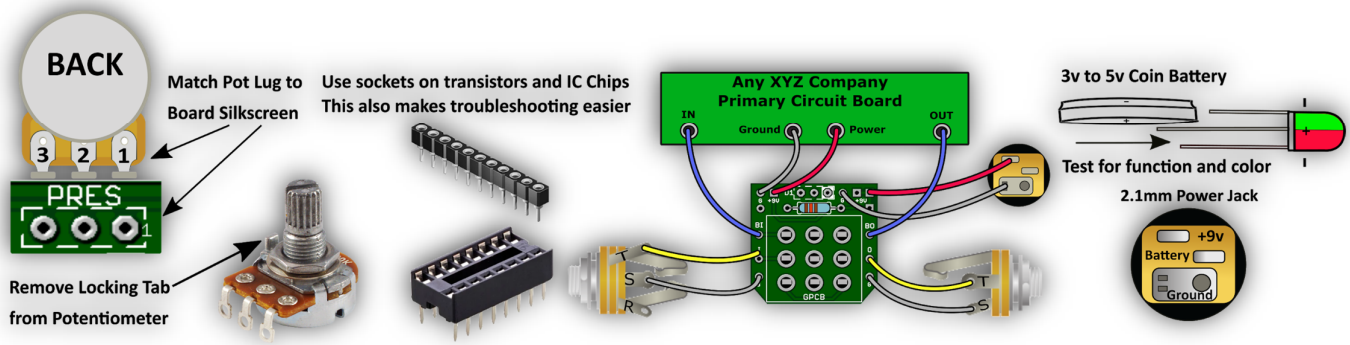

Need a kit?

USA – Check out PedalPartsAndKits for all your needs.
Europe – Das Musikding carries both boards and kits as a service to our Europeans friends.
Australia - PedalPartsAustralia.com carries GuitarPCB Boards and Kits direct.
If they do not have a KIT listed send them a note asking if they can help you out.

This document, PCB, Artwork and Schematic Artwork © GuitarPCB.com. Schematic and PCB design by Bruce R. and Wilkie1. Build Document by Bruce R. Wilkie1 and Barry. All copyrights, trademarks, and artworks remain the property of their owners. Distribution of this document is prohibited without written consent from GuitarPCB.com. GuitarPCB.com claims no rights or affiliation to those names or owners.