BOOGIE 57

Metal heads rejoice as we are introducing our version of the famous Dr. Boogie. You will not find another circuit like this one to bring you the required tones for intense metal chugging. A Preamp design featuring 3 Band Active Tone Control and Presence.

This design uses 2N5457 transistors which we typically carry in our shop. See our Video Demo

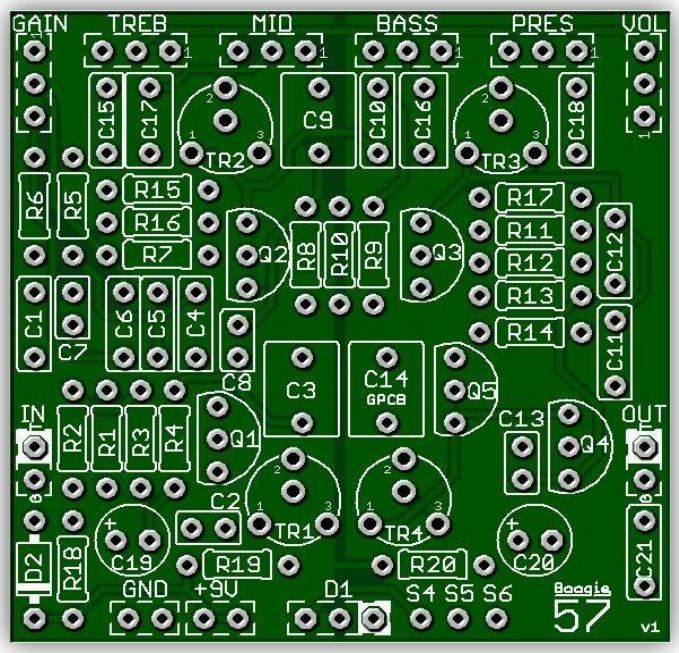

Board Dimensions: 1.95” x 1.93”

Part	Value	Part	Value	Part	Value
R1	2M	**R18**	1k8	**C15**	6n8
R2	1M	**R19 – R20**	100R	**C16**	220n
R3	68k	**R21**	5k1	**C17**	220n
R4	1k8	**C1**	100n	**C18**	33n
R5	2M2	**C2**	220p	**C19**	100u
R6	680k	**C3**	1u	**C20**	100u
R7	470k	**C4**	22n	**C21**	4n7
R8	1k8	**C5**	2n2	**D1**	Bi-Color CA LED
R9	470k	**C6**	1n	**D2**	1n4001
R10	1M	**C7**	22p	**Q1 - Q5**	2N5457
R11	3k9	**C8**	220p	**TR1-TR4**	100k
R12	330k	**C9**	1u	**BASS**	A100k
R13	220k	**C10**	22n	**GAIN**	B1M
R14	1k8	**C11**	*10n	**MID**	***B5K and 5k1 Resistor**
R15	10k	**C12**	22n	**PRES**	B10k
R16	4k7	**C13**	220p	**TREB**	A25k
R17	2k2	**C14**	1u	**VOL**	A100k

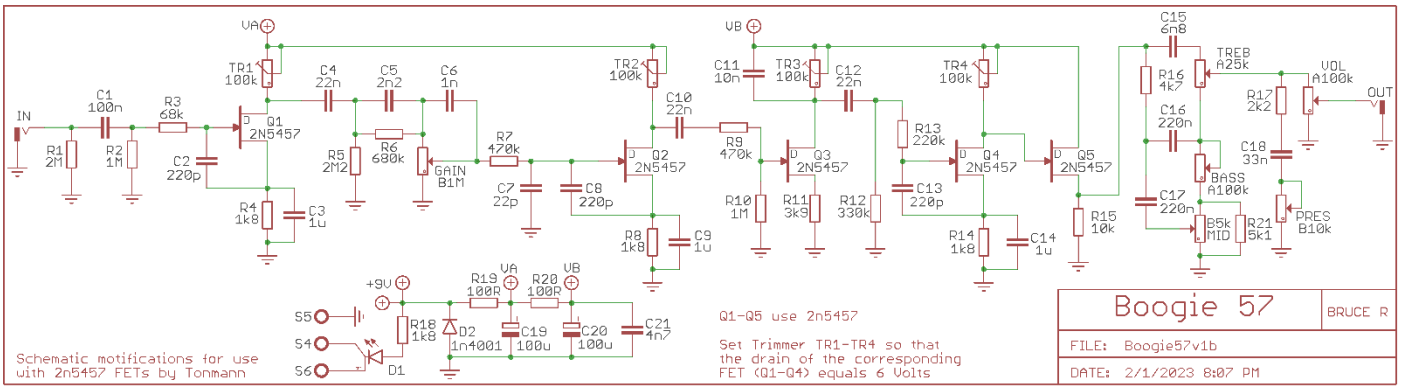

Build Notes:

The v1b version of this board adds an extra resistor (R21) to run in parallel to the Mid Pot effectively making it a 2k5 instead of 5k. The pot and board will work with or without the added resistor. The original circuit called for a B2k5 value but sourcing a (B2k5 potentiometer) is difficult. The original v1 version does not have this resistor but you can still add it by soldering it directly to pot lugs 1 and 3.

Biasing is very important to have a great sounding pedal. Using your D.M.M. and place the Red probe on the Drain of each transistor requiring biasing and the Black Probe on any Ground. Add power to the circuit and turn the associated trimmer till you get close to 5v. Once you are close it is a very fine adjustment. Anywhere near 5v will be excellent. You only need to Bias Q1 thru Q4. Be sure you are using the correct trimmer.

- Recommended **transistors** for this circuit are **2N5457** hence the name **Boogie 57** as they produce the unique quality of a chugging amplifier for true Metal tones unlike any other circuit we carry. Metal heads will love this one. You may use J201s which are hard to find but we have found there is not much discernible difference between them.
- Our version uses a **10nF** value at **C11** to slightly reduce the extreme highs that had previously been a complaint of the original circuit. Our modification fixes that.

Wiring Guides:

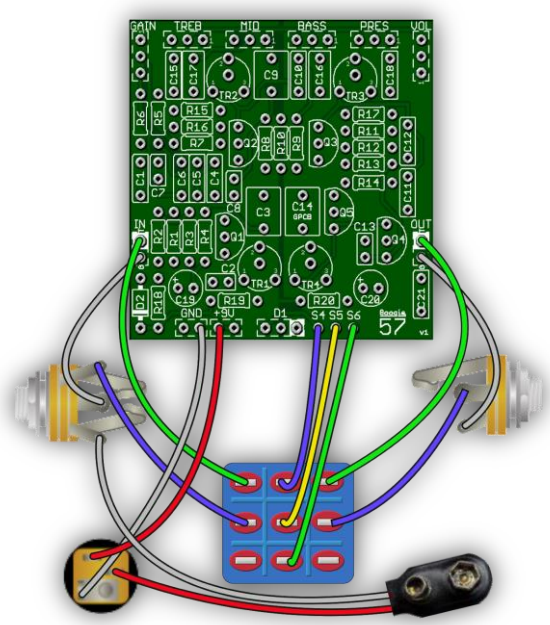

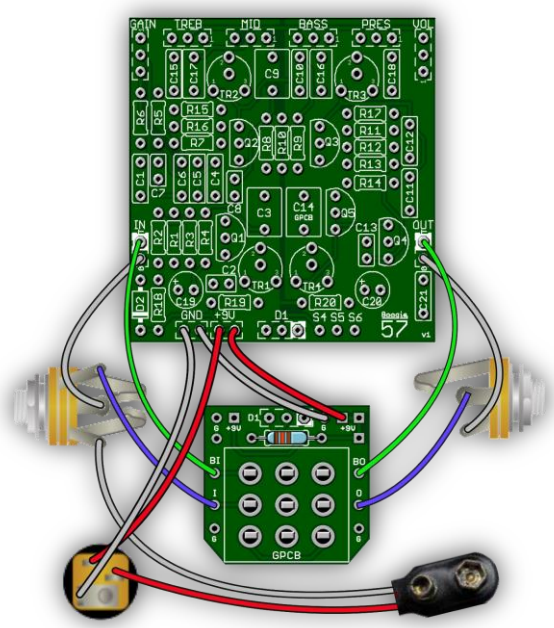

Be sure your In/Out Jack wiring is correct. A Stereo Jack (for battery use only) has a RING lug which is used to connect to the battery ground. If you do not intend to use a battery there is no need for a Stereo Jack. If using Stereo then only use the Tip and Sleeve lugs. S4, S5 & S6 is only needed when the LED is wired to the Main Board.

Use the Board Silkscreen for hand-wiring potentiometers & switches.

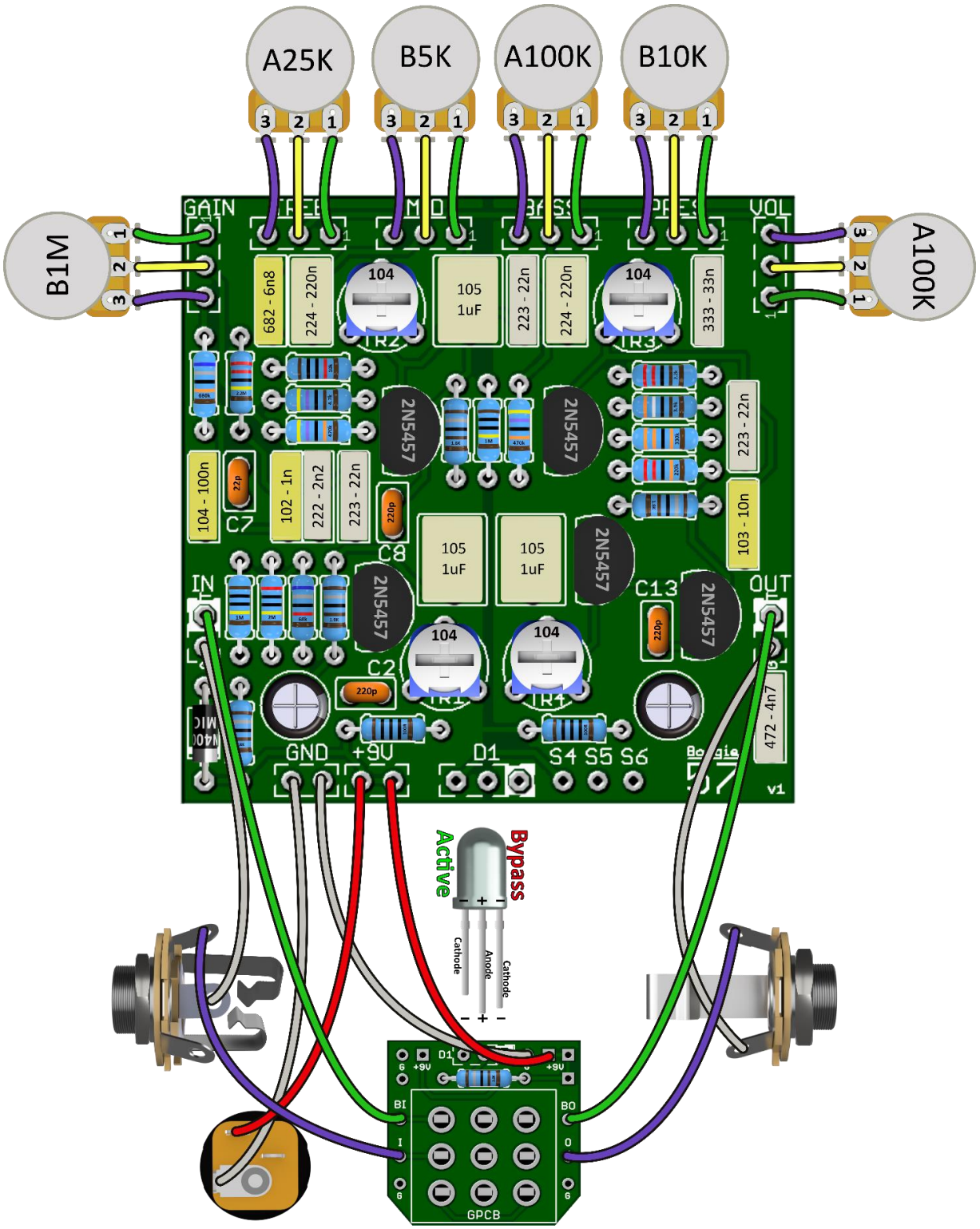

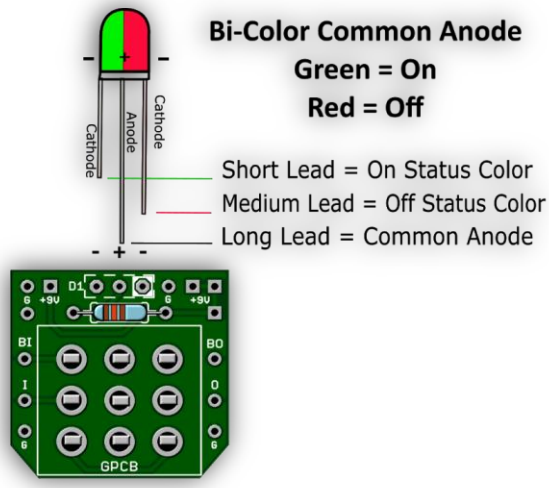

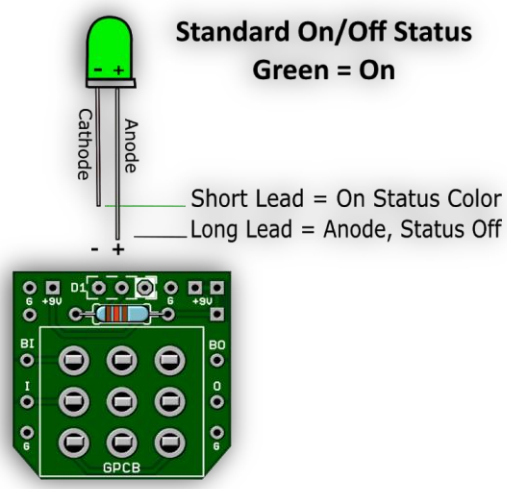

Note: If wiring the LED to our 3PDT board no need to connect S4, S5 & S6 or populate D1 or R18 (CLR) on the main board since you are wiring your LED directly to our board. Direct Online Link: 3 PDT Wiring Board Build Document

Before beginning any build or if you have questions please see our Guides Page on our site. The Guides Page is located in the Main Menu Bar of most pages. Also, we have a dedicated forum for questions about your build.

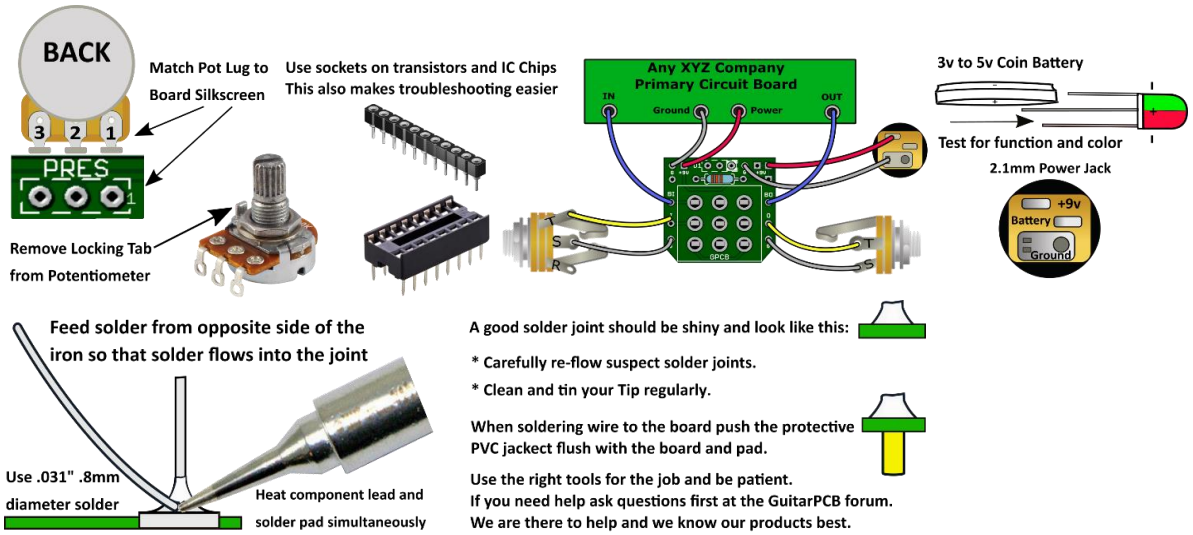

Need a kit? Check out our authorized worldwide distributors:

USA – Check out PedalPartsAndKits for all your GuitarPCB kit needs in the USA.

Europe – Das Musikding Order either boards or kits direct from Europe.

PedalPartsAustralia - Order either boards or kits direct from Australia

This document, PCB, Artwork and Schematic Artwork © GuitarPCB.com. Schematic and PCB design by Bruce R. Build Document by Bruce R. and Barry. All copyrights, trademarks, and artworks remain the property of their owners. Distribution of this document is prohibited without written consent from GuitarPCB.com. GuitarPCB.com claims no rights or affiliation to those names or owners.