Tube Screaming Preamp

Introducing the Tube Screaming Preamp. Finally we have the coveted Tube Screamer tone now with the ability to adjust the Tone for any guitar in any situation quickly. By removing the passive tone control and inserting a Baxandall style 3 Band Active EQ along with Presence control you can now get amazing Screamer Tones never before achievable. It makes you wonder why nobody has really tried to improve on the old passive tone in one of the most talked about guitar pedals in history.

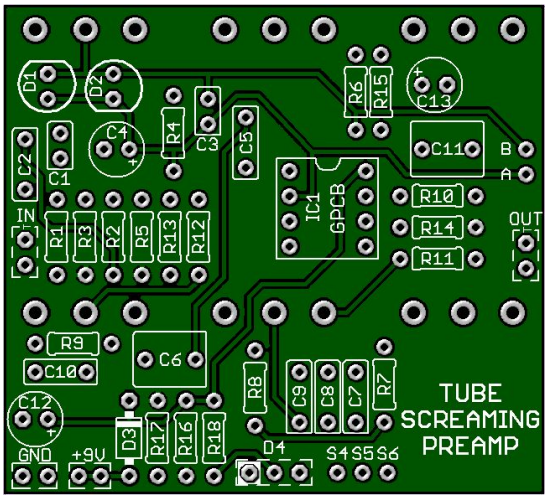

Board Dimensions (W x H) 2.15" x 1.95"

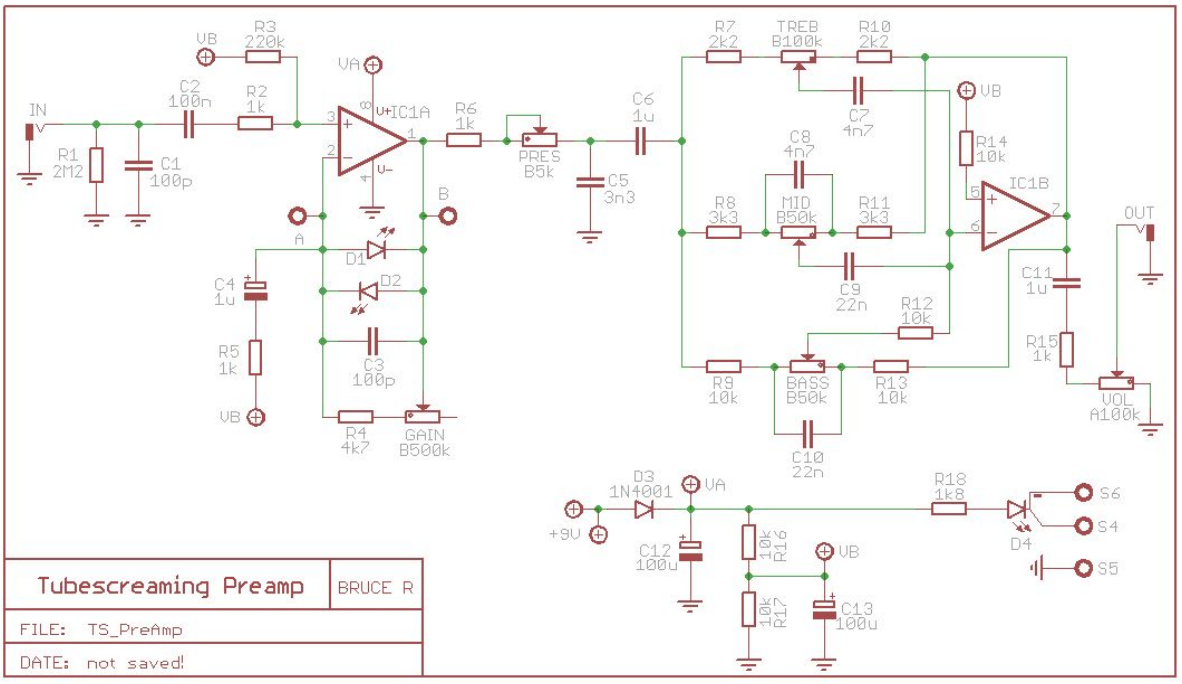

Build Notes:

*** IC: TL072 – You may also try other Dual Opamps like NE5532, 4558, Burr Brown 2134 etc...**

**** D1 – D2 – Clipping LEDs – Try Red, Blue or Violet for a warm tube tone or you may also try our "hand tested" Germanium Diodes for a different character. Since the circuit uses a Baxandall Active EQ you will still have enough Gain on tap. Also feel free to try Silicon Diodes as well. Socket and See!**

A / B Pads were added if you wish to use an off-board clipping selector like our Roto-Tone or DPDT boards.

Bill of Materials

Part	Value	Part	Value	Part	Value	Part	Value
R1	2M2	R12	10k	C4	**1u**	D1	**Clipping LED
R2	1k	R13	10k	C5	3n3	D2	**Clipping LED
R3	220k	R14	10k	C6	**1u**	D3	1N4001
R4	4k7	R15	1k	C7	4n7	D4	CA - Status LED
R5	1k	R16	10k	C8	4n7	IC	*TL072
R6	1k	R17	10k	C9	22n	VOL	A100k
R7	2k2	R18	1k8	C10	22n	GAIN	B500k
R8	3k3			C11	**1u**	BASS	B50k
R9	10k	C1	100p	C12	100u	MID	B50k
R10	2k2	C2	100n	C13	100u	TREB	B100k
R11	3k3	C3	100p	IC1	*TL072	PRES	B5k

Additional Build Notes:

At C6 and C11 we prefer the MLCC type. MLCC are non polar & take up less room in height & width. Only slightly more expensive but will last a lifetime. Choose MLCC with a 5mm lead spread. I've hyperlinked choices below from Mouser. We left enough space to also use a larger film capacitor.

Notes about the Tone Section:

This stage is an active, true tone equalizer. Each band will boost or cut the signal. Start with each control in the center or 50% position. Turn the control clockwise, CW to BOOST and counter-clockwise, CCW to CUT the signal. After achieving the desired tone setting, adjust the final volume level to suit. As with all active equalizers, best results are usually achieved by cutting frequencies rather than over- boosting. There is some interaction between adjacent bands. This permits smooth transitions in the tonal setup. Furthermore with our Presence control you can easily dial in a Les Paul or a Strat during a guitar change and do it quickly.

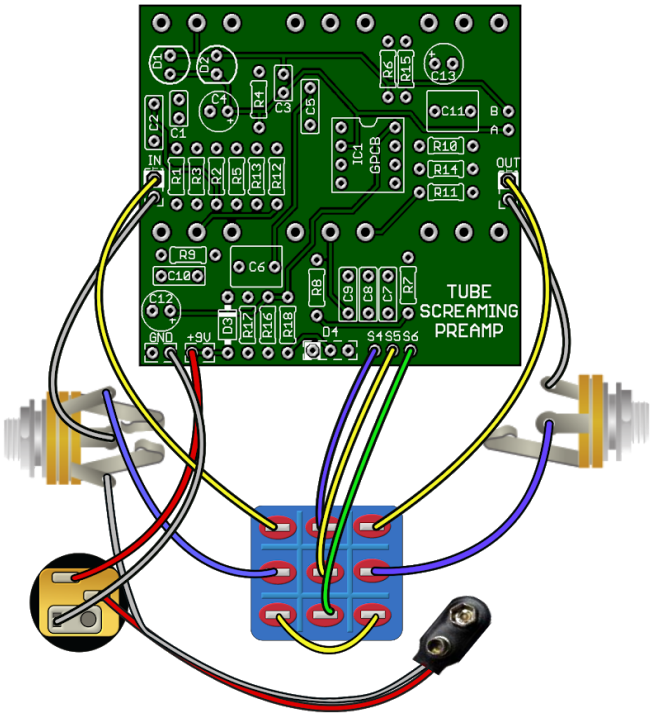

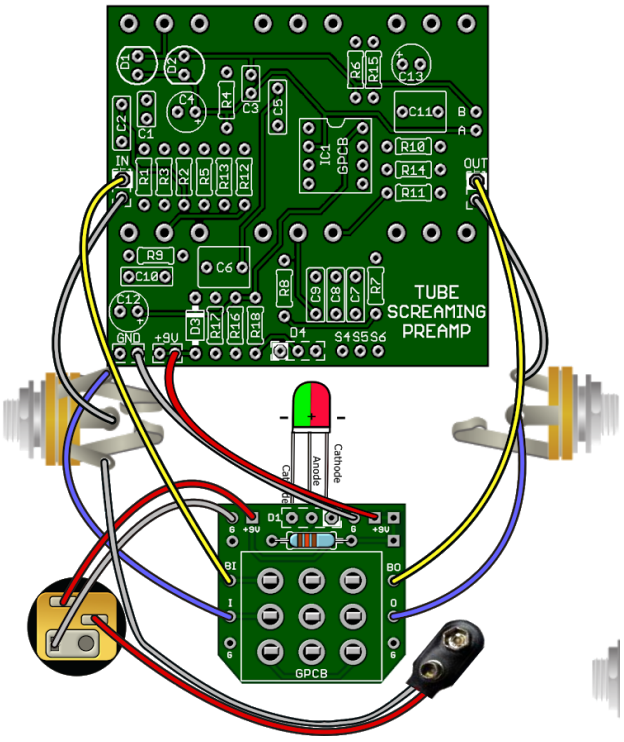

Be sure your In/Out Jack wiring is correct. A Stereo Jack (for battery use only) has a RING lug which is used to connect to the battery ground. If you do not intend to use

a battery there is no need for a Stereo Jack. If using Stereo then only use the Tip and Sleeve lugs. S4, S5 & S6 is only needed when the LED is wired to the Main Board.

If using our convenient 3PDT Wiring Boards (below) here is an LED wiring guide. You may use Common Anode Bi-Color or Standard On/Off. The wiring boards use the same symmetrical layout as if wiring straight to the switch.

STATUS LED

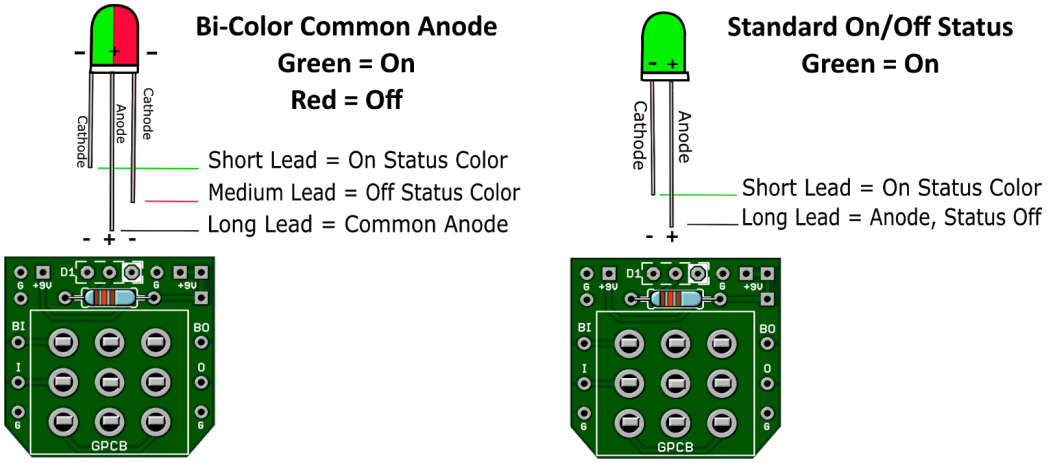

Note: If wiring the LED to our 3PDT board no need to connect S4, S5 & S6 or populate D4 or R18 (CLR) on the main board since you are wiring your LED directly to our board.

Direct Online Link: [3PDT Wiring Board Build Document]

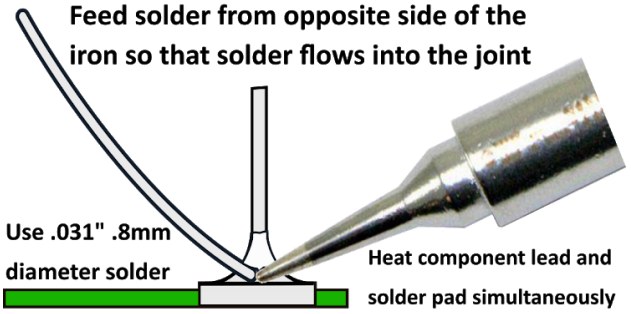

A good solder joint should be shiny and look like this:

*** Carefully re-flow suspect solder joints.**

*** Clean and tin your Tip regularly.**

When soldering wire to the board push the protective PVC jackect flush with the board and pad.

Use the right tools for the job and be patient.
If you need help ask questions first at the GuitarPCB forum.
We are there to help and we know our products best.

Other important notes:

- While a TL072 IC is stock feel free to try 4558, NE5532, Burr Brown OPA2134PA or other dual opamp
- R18 is the current limiting resistor. Brightness is a preference. 1k8 will yield a very bright LED and the higher the resistance the dimmer the light. 3k or even 4.7k has been used. This is your choice.

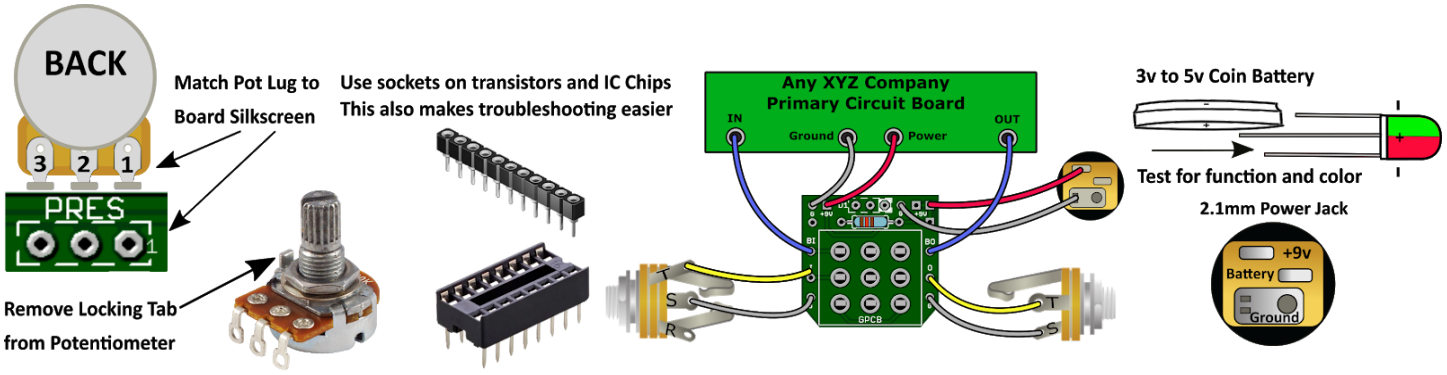

Potentiometers. Drill Tips: Measure your components before selecting a drill bit. We recommend drilling the pot holes, mounting the pots in the enclosure, and then soldering the pots to the board. This approach should resolve the issue of the pots not fitting through the holes after soldering. We also recommend you make the holes for the pots a little larger than the threads in case you decide to remove the board and put it back in during the build, to avoid problems. Use this guide at your own risk. Make sure page scaling is turned off when you print this PDF, or the image above may be smaller than expected. Verify everything before drilling.

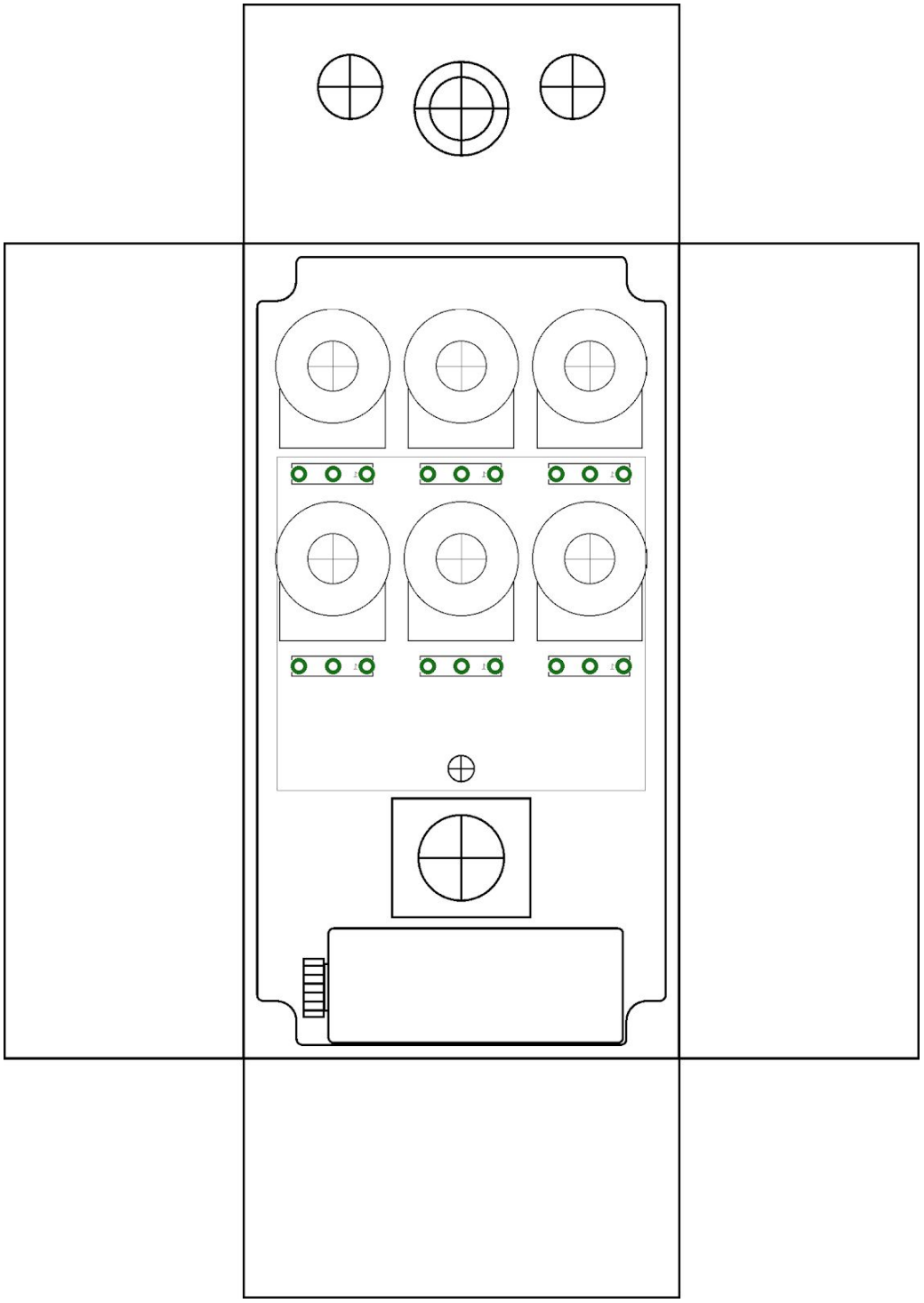

Need a kit? Check out our authorized worldwide distributors:

USA – Check out PedalPartsAndKits for all your GuitarPCB kit needs in the USA.

Europe – Das Musikding Order either boards or kits direct from Europe.

PedalPartsAustralia - Order either boards or kits direct from Australia

If they do not have a KIT listed send them a note asking if they can help you out.

The best option is to install the pots in the enclosure first before soldering them to the board.

This document, PCB Artwork and Schematic Artwork © GuitarPCB.com. Schematic, PCB and this document by Bruce R. and Barry S. All copyrights, trademarks, and artworks remain the property of their owners. Distribution of this document is prohibited without written consent from GuitarPCB.com. GuitarPCB.com claims no rights or affiliation to those owners.