Sabotage Drive v2.1

The Sabotage PCB is based on the Catalinbread circuit but has a few tweaks. Controls are Gain, Presence, and Volume for different amounts of crunch as you would expect from a Laney™ style rig and perhaps most importantly for tone shaping is the inclusion of the Range knob that provides an amazing diversity of heavier tones. The Range control is variable to match whatever range tone you seek (Classic Treble Boost, Treble w/ Mids, Full Range w/ Tight Bottom, or Full Range Heavy Lows).

NOTE: The previous v2 version (see image below) required you to reverse the orientation of (2) electrolytic caps compared to the silkscreen. C8 and C12. If you have the current PCB indicated by a v2.1 under the Sabotage branding it is not necessary. Simply populate the PCB as normal.

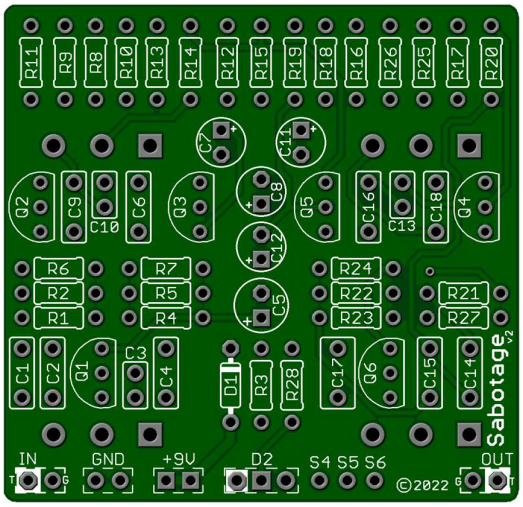

Board Dimensions (W x H) 2.10” x 2.02

R1	220k		**R15**	470k		**C1**	4n7		**C15**	22n
R2	68k		**R16**	1M		**C2**	68n		**C16**	22n
R3	10k		**R17**	1M		**C3**	47p		**C17**	220n
R4	4k7		**R18**	1k		**C4**	100n		**C18**	10n
R5	47R		**R19**	820R		**C5**	47u			
R6	1M		**R20**	100k		**C6**	100n		**RANGE**	C500k
R7	33k		**R21**	220k		**C7**	2u2		**VOL**	B250k
R8	1M		**R22**	33k		**C8**	22u		**GAIN**	B1M
R9	1M		**R23**	22k		**C9**	22n		**PRES**	B10k
R10	680k		**R24**	1k		**C10**	47p			
R11	1k		**R25**	2M2		**C11**	2u2		**Q1**	BC550
R12	1k5		**R26**	2M2		**C12**	2u2		**Q2 - Q6** (5pcs)	2N5485
R13	47k		**R27**	4k7		**C13**	47p		**D1**	1n5817
R14	470k		**R28**	1k8		**C14**	22n		**D2**	Status LED

STATUS LED

D2 is a Status LED that can be either a Bi-Color Common Anode or a Standard On/Off LED. (See Tip Sheet)
R28 is the CLR (current limiting resistor) for the Status LED. Use anything from 1k8 (Bright) to 4k7 (Dimmer)

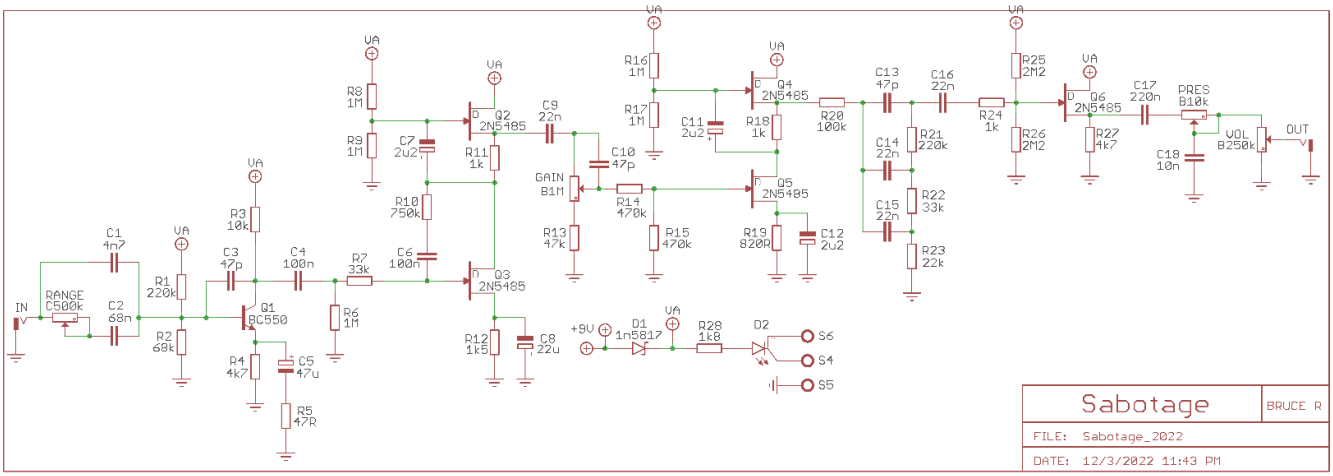

Controls:

Gain – Choose the amount of Gain to suit your overdriven tone. Clean up with guitar volume for soft passages easily.

Volume – Adjust to your needs, more than unity gain available.

Presence – Adjust this when using different amps or guitars that have more or less high-end.

Range – Range control lets you choose frequency response from treble-only boost to full-range boost. Pushes overdrive into distortion.

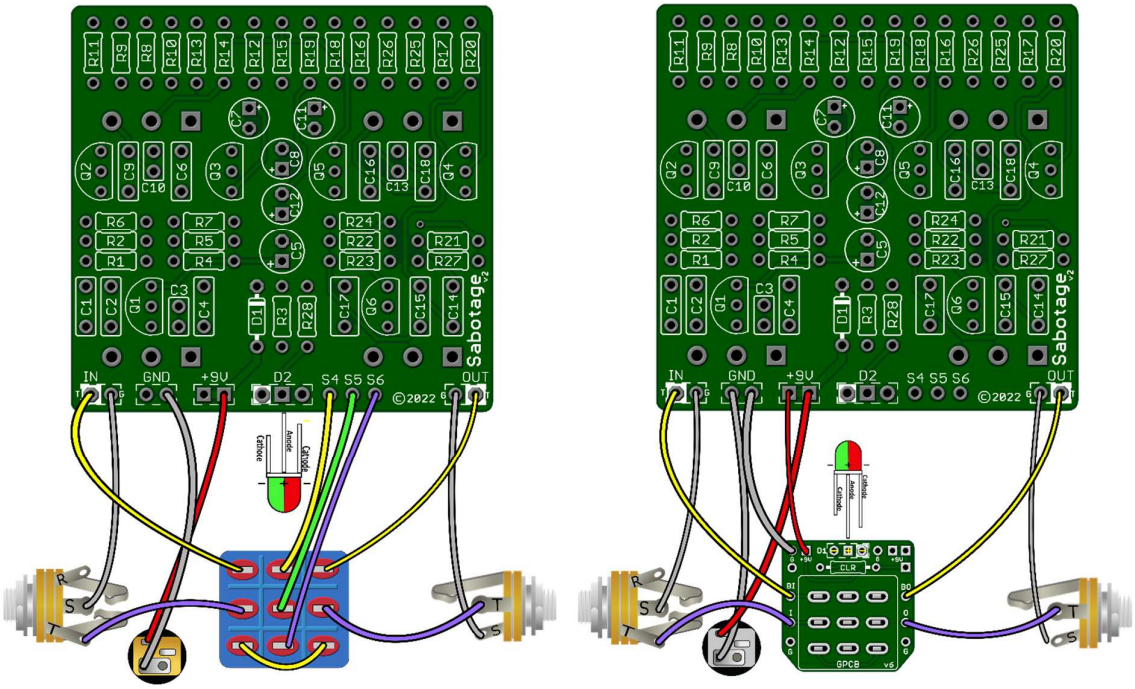

Drill Template

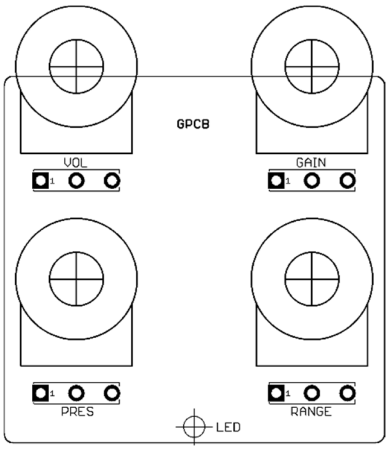

GuitarPCB Tip Sheet

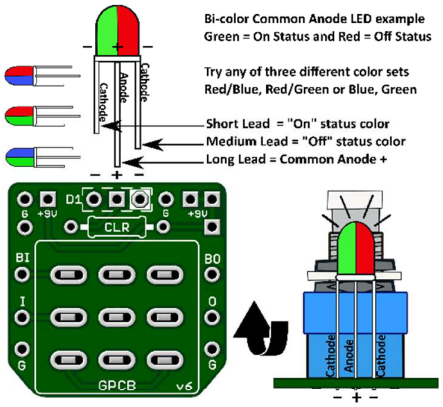

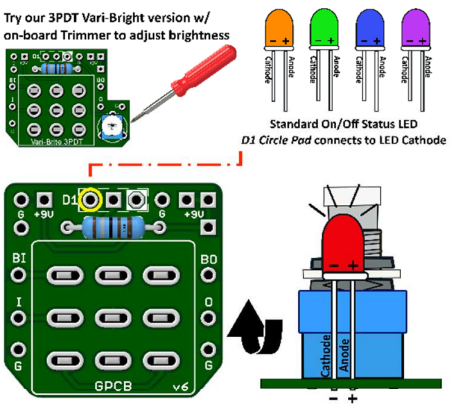

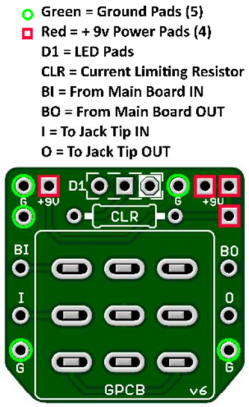

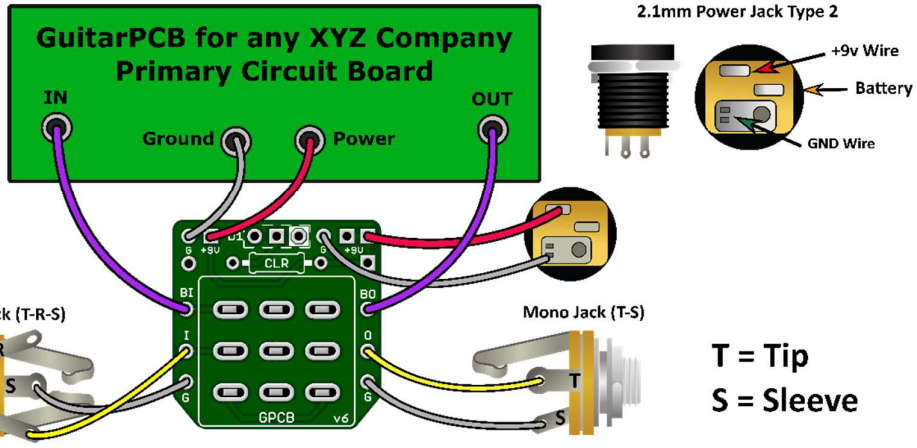

Multiple +9v and Ground Pads are convenient hookup points for additional circuits within the same enclosure. This also allows for diverse wiring schemes to suit indiviual needs.

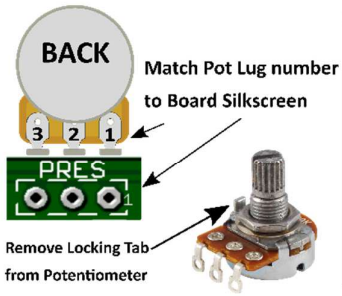

Sockets make troubleshooting easier

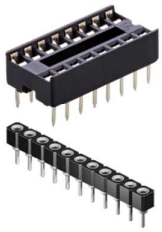

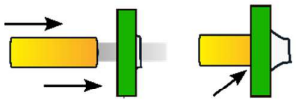

When soldering wire to a PCB push the protective PVC jacket flush with the board and pad.

Main Board IN/OUT Pads

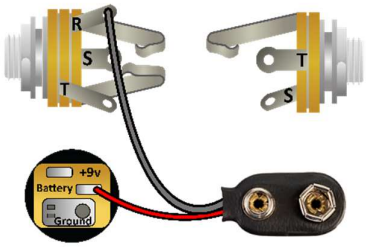

Input/Output Jack Wiring

T = Tip | R = Ring | S = Sleeve

A Stereo Jack is only needed if using a Battery. Otherwise use a Mono Jack
Battery Strap RED wire is connected to Power Jack
Battery Strap Black wire is connected to RING (stereo jack)
If wiring an LED to our 3PDT Wiring Board then S4, S5 & S6 are not needed

This Build Document, PCB, Artwork and Schematic image are property of ©GuitarPCB.com
All copyrights, trademarks and artworks remain the property of their owners.
Any company or product names used are for identification and educational purposes only.
GuitarPCB is in no way affiliated with any said companies and are not to be misrepresented.