GuitarPCB.com

V6 Drive by Tonmann

When is a V6 better than a V8?

- Add an exquisite tone with plenty of Gain and Sustain.
- Add in a versatile Baxandall style tone circuit with plenty of Boost or Cut on Bass and Treble.
- Vintage Fender™ and Vox™ amp style tones on Steroids with an amazing ability to clean up with your Guitar Volume for a super versatile circuit.

So, when is a V6 better than a V8? You got it!! - The V6 Drive by GuitarPCB.com

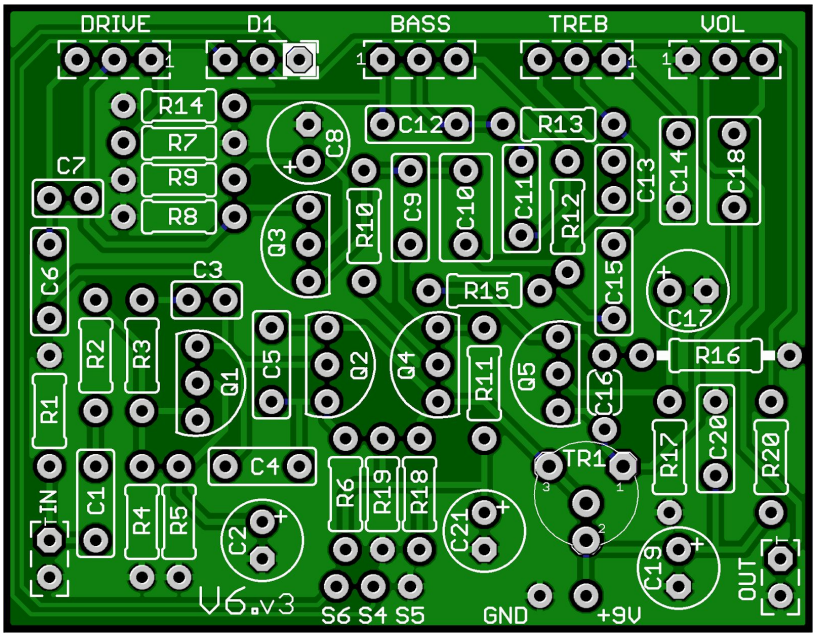

Board Dimensions (W x H) 2.2” x 1.7” ca. 55.6 mm x 43.2mm

R1	1M	R11	470k	C1	100n	C11	1n5	Q1 - Q4	*2N5457
R2	56k	R12	220k	C2	10µ	C12	15n	Q5	*J113 or MPF102
R3	470k	R13	100k	C3	330p	C13	330p		
R4	470k	R14	22k	C4	10n	C14	3n3	TR1	5k
R5	1k	R15	33k	C5	1n	C15	22n		
R6	470k	R16	1M	C6	1n	C16	680p	DRIVE	B1M Lin
R7	100k	R17	1k	C7	680p	C17	22µ	BASS	A1M Log
R8	470k	R18	10k	C8	22µ	C18	220n	TREB	A1M Log
R9	1k	R19	10k	C9	100n	C19	22µ	VOL	A100k Log
R10	1k	R20	**1k8	C10	220n	C20	100n		
						C21	22µ	D1	CA Bi-Colour LED

Build Notes:

*R20 - 1k8 is a value of resistance for the LED aka CLR (Current Limiting Resistor). This is a bright LED. If you prefer a dimmer LED you may choose anything from 1k8 to 4k7 and in between safely.

** For Q5 you may use either an J113 or MPF102 with similar results. Bias the Drain leg of Q5 with a DMM and the Trimmer to 5.5v (See Crash Course #1 if you need help.) Be sure you locate a reliable source for JFETs (There are many counterfeits flooding the market) I will usually carry the excellent J113 JFET. Small Bear is a great reliable source for the 2N5457 and for other builds the J201.

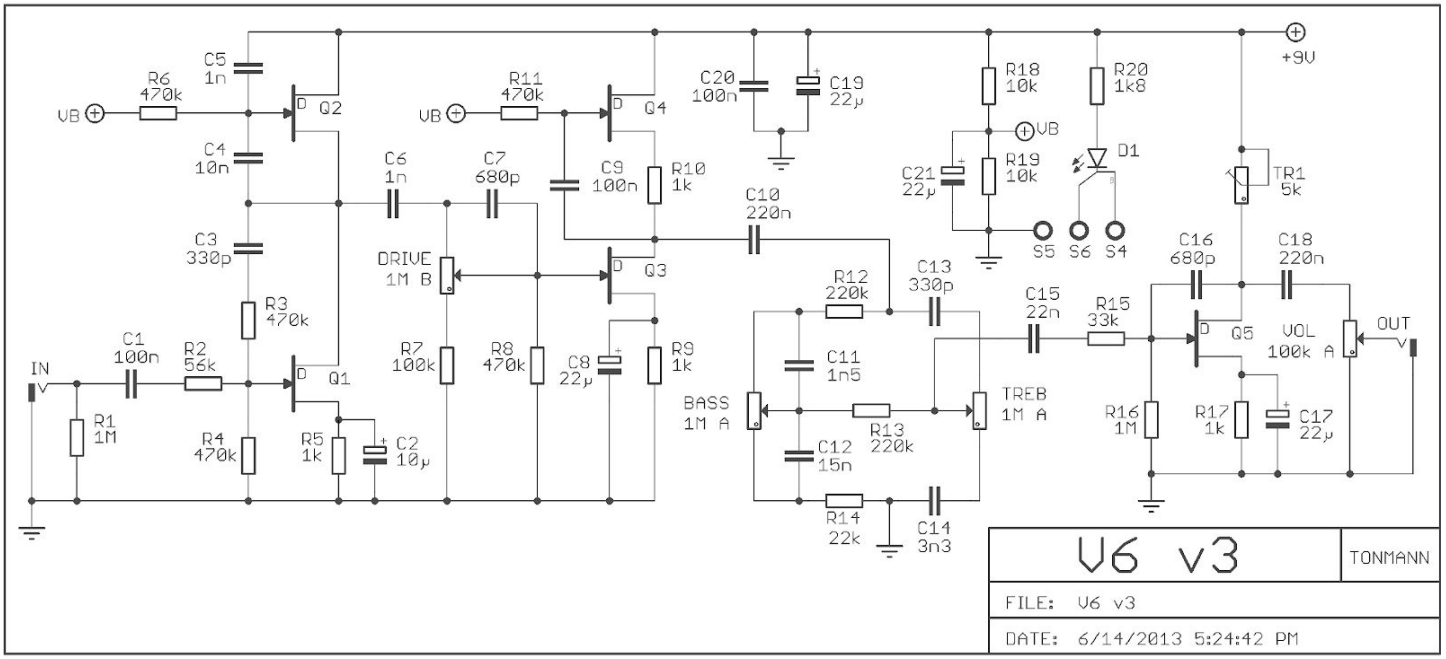

STATUS LED

D1 is a common anode bi-color LED. The diagram at right shows the pin-out, schematic symbol and pad connection for a common anode LED. The pin-out for the bi-color LED is typically (but not always) as follows:
The lead 1 pad on the circuit board is marked with a white box.

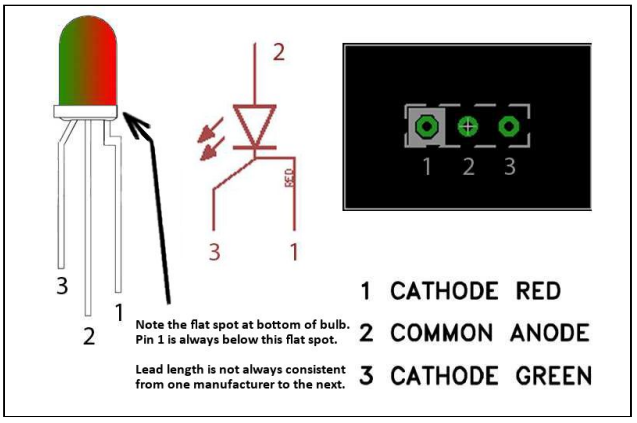

When connected correctly, the LED will light red when power is applied and the circuit is in bypass mode. The LED will light green when in effects mode. **If you wish to use a standard LED, connect the anode to the middle pad and the cathode to the right (non-white) pad to show the circuit in effects mode.** If you use a 3PDT wiring board that includes an LED, you can omit this LED and R20. *R20 is the LED's Current Limiting Resistor (CLR). If you use a different LED, you may want to change this value to adjust LED brightness.

If you are using one of GuitarPCB's handy 3PDT wiring boards, pads S4, S5, S6 and D1 would be ignored and R20 would not be installed. See wiring guide below for reference.

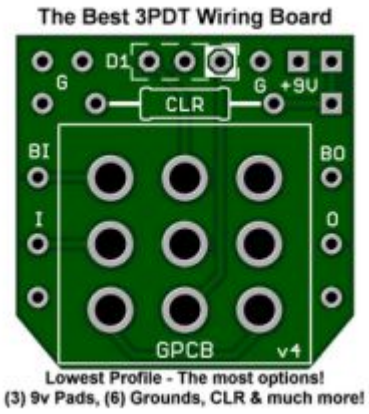

WIRING

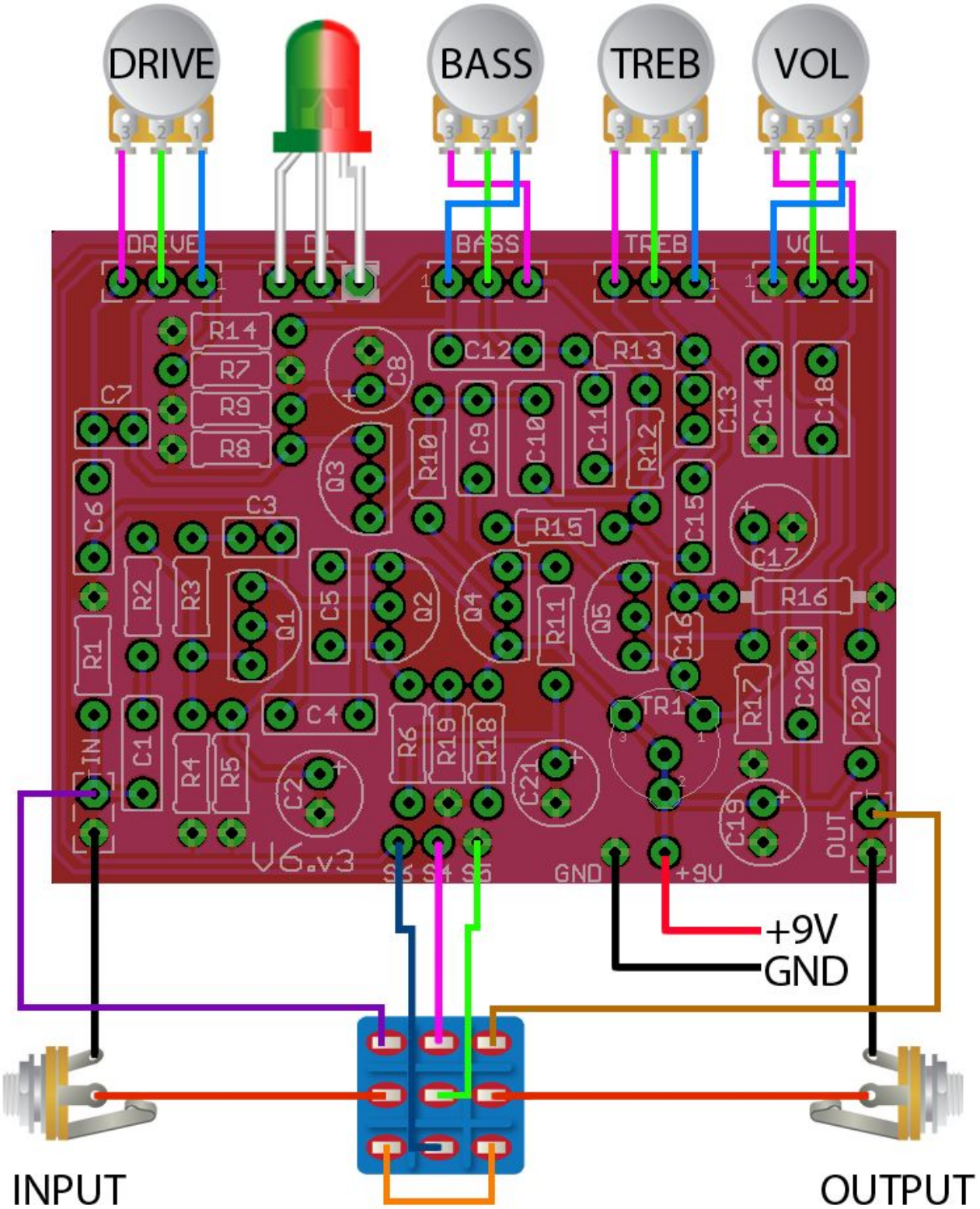
DRIVE
BASS
TREB
VOL
DRIVE
D1
BASS
TREB
VOL
R14
R7
R9
R8
C7
C8
C12
R13
C13
C14
C18
Q3
R10
C9
C10
C11
R12
C6
C3
R15
C15
C17
R16
R2
R3
Q1
C5
Q2
Q4
R11
Q5
C16
R1
C1
R4
R5
C4
R6
R19
R18
C21
TR1
R17
C20
R20
C2
C19
IN
OUT
V6.v3
S6 S4 S5
GND
+9V
+9V
GND
INPUT
OUTPUT

Additional Build Advice and Guide Links:

IC's are easily damaged by heat from soldering and should never be directly soldered to the PCB.
For transistors, diodes, and LED's, use SIP (Single inline package) sockets. You simply cut the number of sockets required with an Exacto / Stanley knife or by gripping and rocking with pliers. This allows for easy changes and troubleshooting.

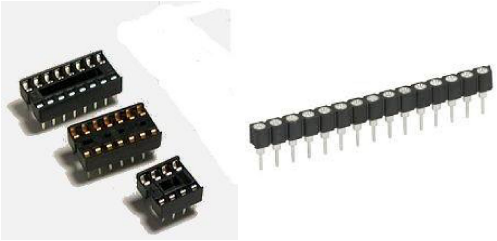

Soldering Tutorial on Youtube

Need a kit? Check out our authorized worldwide distributors:

USA – Check out PedalPartsAndKits for all your GuitarPCB kit needs in the USA.

Europe – Das Musikding Order either boards or kits direct from Europe.

PedalPartsAustralia - Order either boards or kits direct from Australia

If they do not have a KIT listed send them a note asking if they can help you out.

This document, PCB Artwork and Schematic Artwork © GuitarPCB.com. Schematic, PCB and this document by Bruce R. and Barry. All copyrights, trademarks, and artworks remain the property of their owners.Distribution of this document is prohibited without written consent from GuitarPCB.com. GuitarPCB.com claims no rights or affiliation to those names or owners.