Tube Screaming Ultra by GuitarPCB

Multiple Boutique TubeScreamers all featuring switchable Diode/Opamp Clipping.

- **Landgraff Dynamic Overdrive**
- **Robin Trower Style Drive**
- **Classic Ibanez TS808 Style Drive**
- **King Of T.S. Style Tone!**

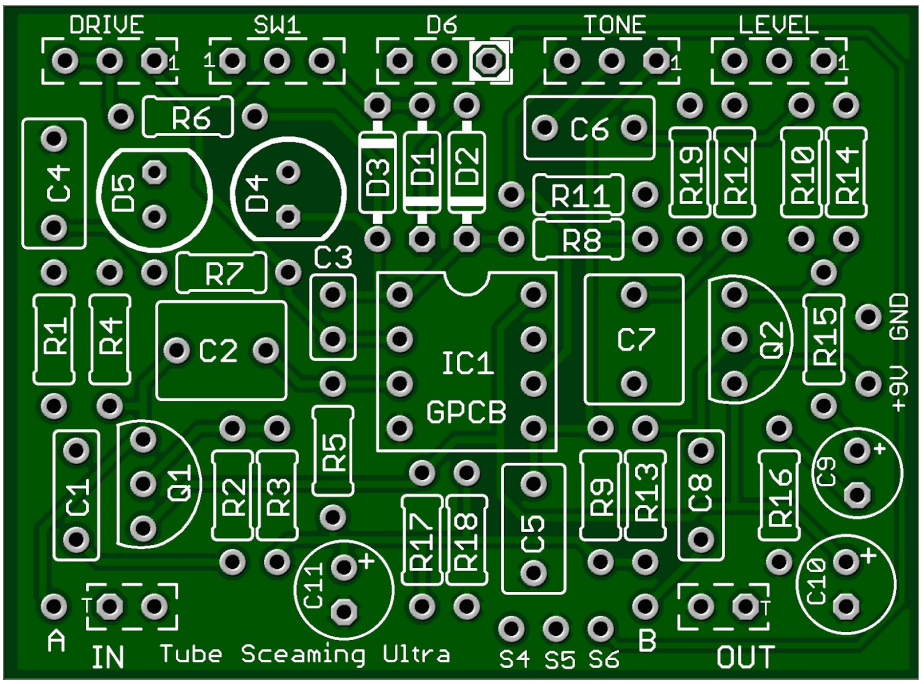

Board Dimensions (W x H) 2.05” x 1.51” ca. 52 mm x 38.4 mm

Our circuit features an On/Off/On clipping switch SW1 to add Ultra flexibility by offering LED Clipping as well as Stock Diode and pure Opamp clipping which enhances each build while always retaining their stock options.

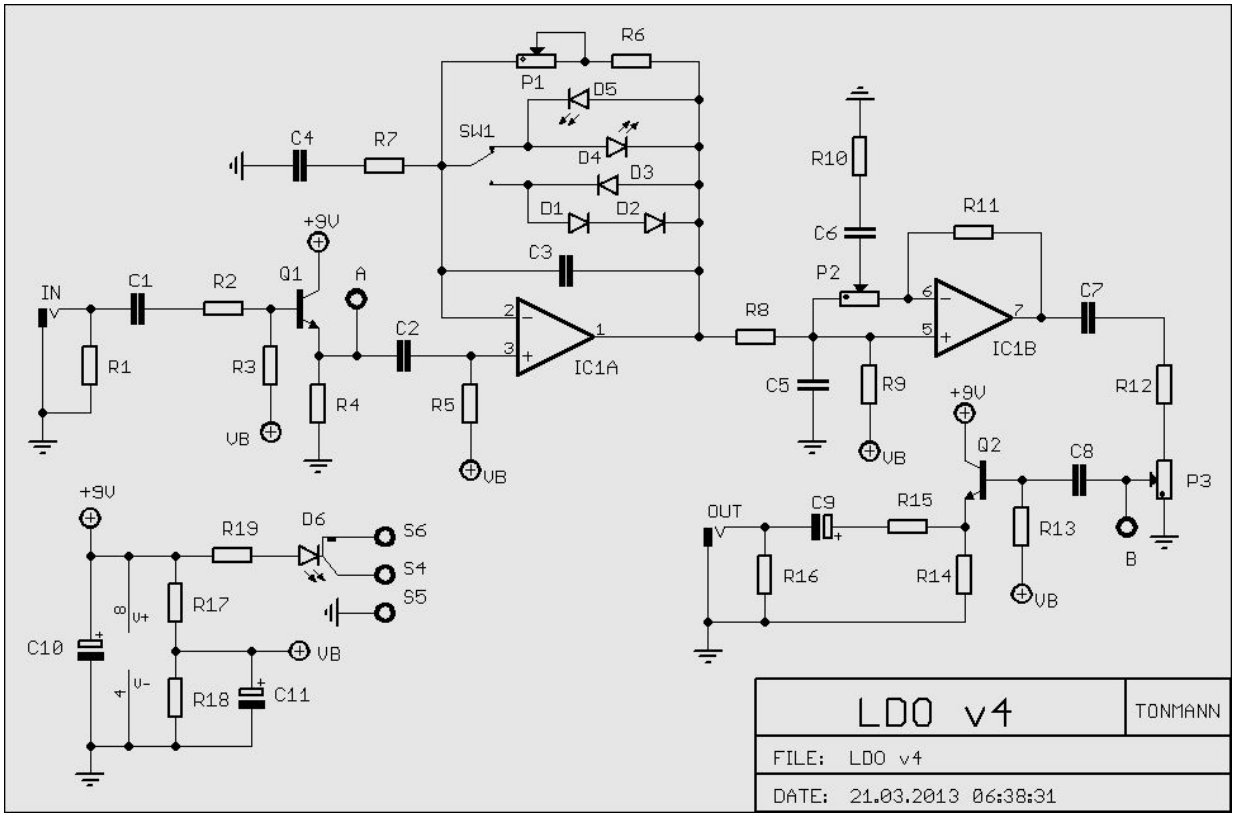

R1	1M		C1	22n		D1	1N914
R2	1k		C2	1µ *	22n	D2	1N914 **
R3	510k		C3	51p		D3	1N4001
R4	10k	1M	C4	220n		D4	LED
R5	10k	470k	C5	220n		D5	LED
R6	10k	18k	C6	220n		D6	CA Bi-colour LED
*R7	1k	4k7	C7	1µ *			
R8	1k		C8	100n		** Replace with a jumper for symm	
R9	10k		C9	10µ			
R10	220R		C10	100µ	10µ	P1 DRIVE	B1M LDO / B500k others
R11	1k		C11	47µ	10µ	P2 TONE	25k Lin
R12	1k					P3 LEVEL	100k Log
R13	510k						
R14	10k		Buffer			SW1	SPDT On-Off-On
R15	100R		Q1	2N5088			
R16	10k		Q2	2N5088			
R17	10k						
R18	10k		IC1	JRC 4558			
R19	*1k8						

Build Notes and Mods:

Q1 and Q2 are purely buffer stages, the choice of transistors is **relatively unimportant**, we have chosen 2N5088 as they are easily obtainable and have **excellent noise specifications** for a quality buffer.

Four Build Ideas:

1. **LDO** or **Landgraff** boutique build uses all components as listed in black (not highlighted).
2. **RTO** aka **Robin Trower Style** build differs in that the **Input Buffer is not used**, **D2** is replaced by a jumper to give symmetrical clipping and all component value changes are (marked in yellow above). To remove the input buffer from the circuit **do not install R1, R2 R3, C1 and Q1**. The **input wire** from the switch is then connected to **pad A** instead of the **IN (T) pad**.
3. **808 Style Build:** Use all Landgraff Dynamic Overdrive values with these exceptions **C4: 47n, Gain Pot: B500k, R7: 4k7, R6: 51k and IC is 4558.**
4. **King of T.S.:** Build two boards in series. Build two different styles to be used in tandem. R/B

Mod Idea: If you used a 1M potentiometer for the Gain control and decide it is too much you could easily solder a 1M resistor between lugs 1 and 3 of the 1M pot giving you 500K or work out what resistance you'd need for 750K if you want to try that value. This will prevent the Gain resistance from causing any squealing in the final rotation by using two of the three Diode switching options. We suggest 500k always since this is supposed to be a Boost to Medium Gain circuit and even with 500k there is still plenty of distortion on tap.

STATUS LED

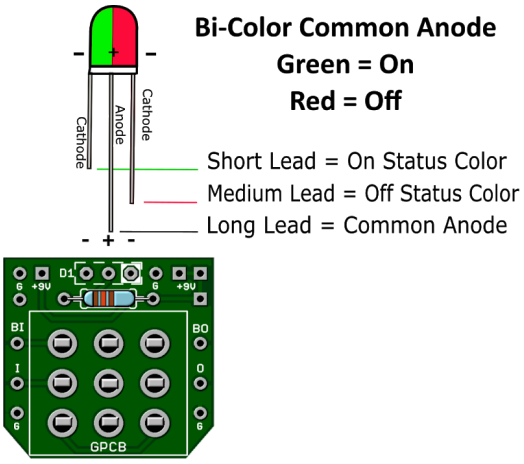

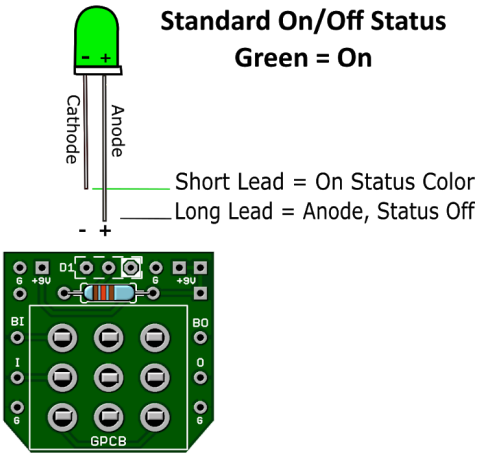

Note: If wiring the LED to our 3PDT board no need to connect S4, S5 & S6 or populate D6 or R19 (CLR) on the main board since you are wiring your LED directly to our board.

Direct Online Link: [3PDT Wiring Board Build Document]

Landgraff Dynamic Overdrive Build "LDO". Note IN connection (Pink Wire) to (T) pad.

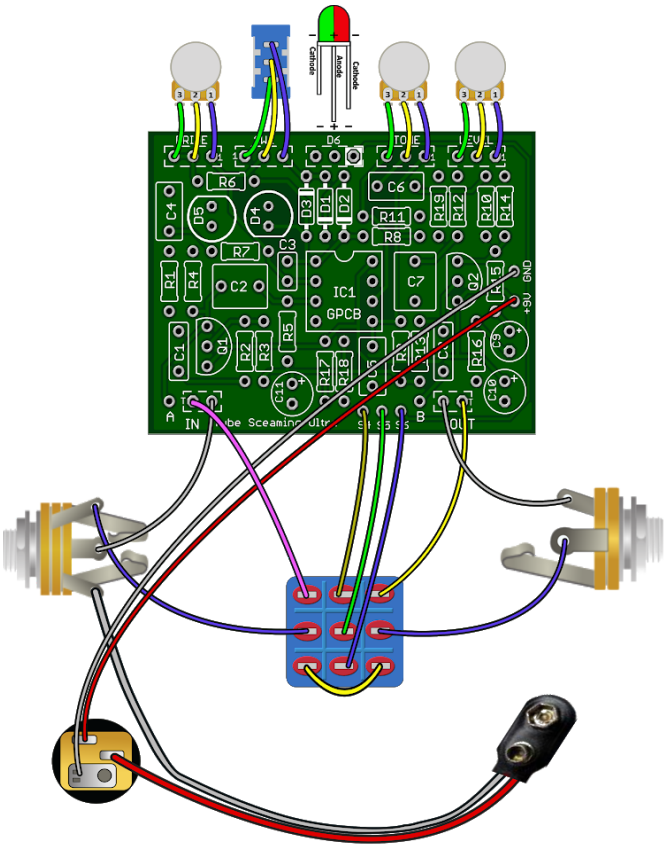

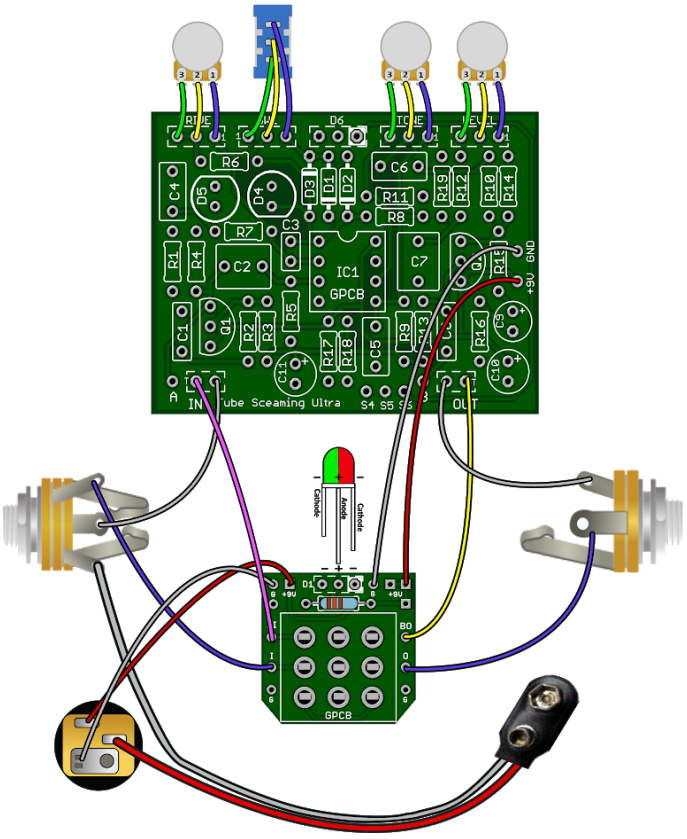

Robin Trower Style Build “RTO”. Note IN connection (Pink Wire) to (A) pad instead of (T) pad.

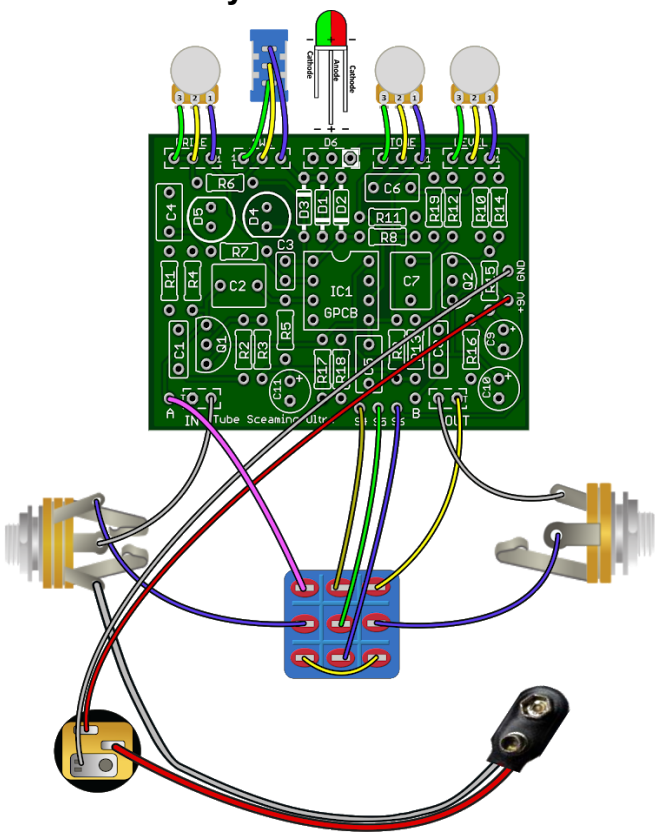

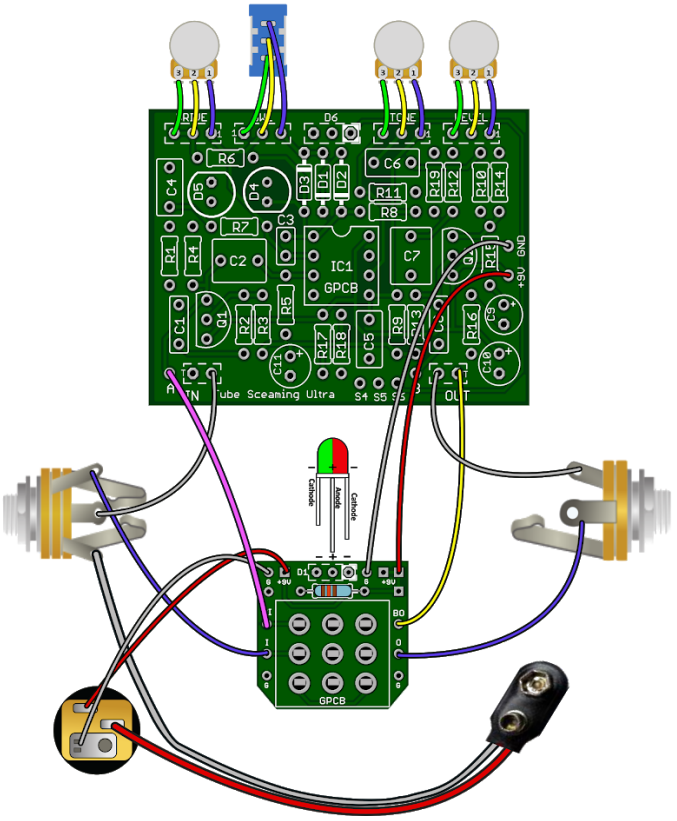

No Buffer Modification: Remove <u>both the input and output buffers</u> and then complete either build..
To remove <u>both buffers</u> do not install R1, R2 R3, R13, R14, R15, R16, C1, C8, C9, Q1 and Q2.
The value of R4 is changed to 1M for both builds.
IN wiring is connected to pad (A) and OUT wiring is connected to pad (B) and neither (T) pad is used (Pink Wires).

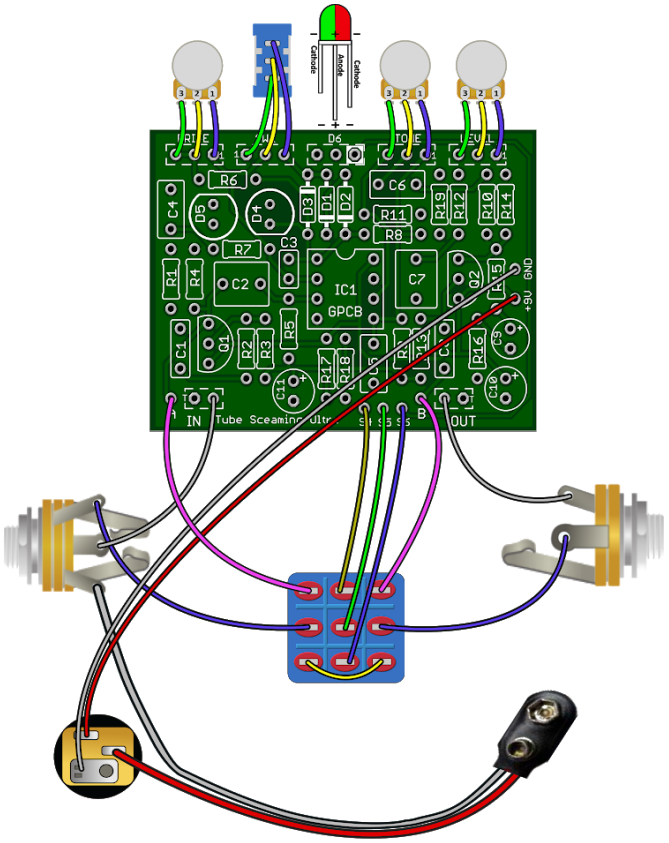

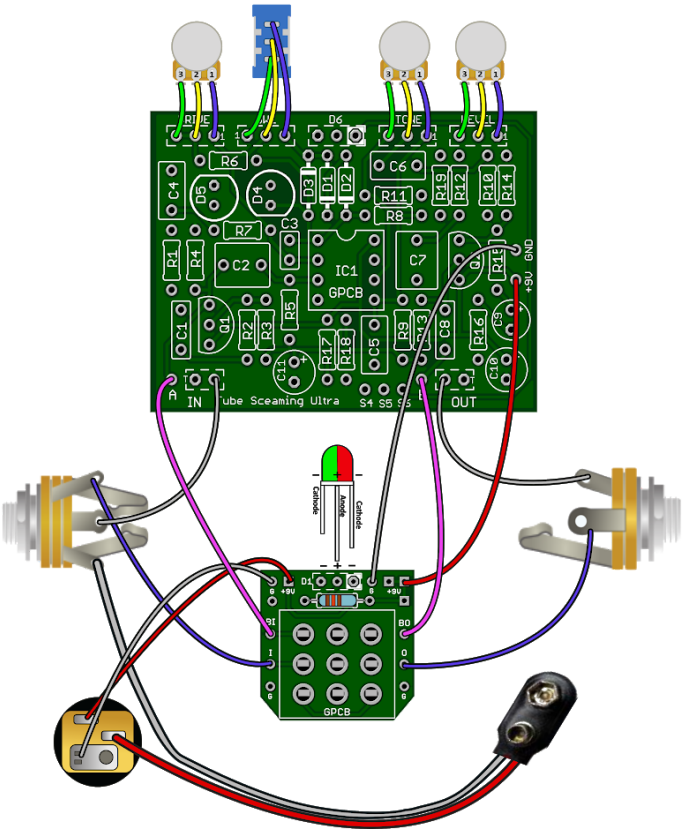

Be sure your In/Out Jack wiring is correct. A Stereo Jack (for battery use only) has a RING lug which is used to connect to the battery ground. If you do not intend to use a battery there is no need for a Stereo Jack. If using Stereo then only use the Tip and Sleeve lugs. S4, S5 & S6 is only needed when the LED is wired to the Main Board.

If using our convenient 3PDT Wiring Boards (below) here is an LED wiring guide. You may use Common Anode Bi-Color or Standard On/Off. The wiring boards use the same symmetrical layout as if wiring straight to the switch.

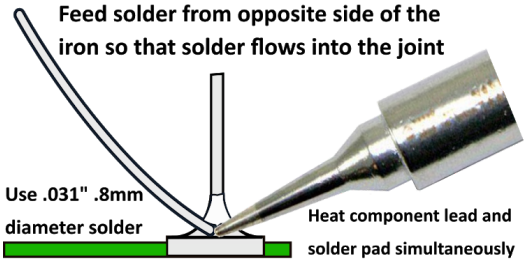

A good solder joint should be shiny and look like this:

* Carefully re-flow suspect solder joints.
* Clean and tin your Tip regularly.

When soldering wire to the board push the protective PVC jackect flush with the board and pad.

Use the right tools for the job and be patient.
If you need help ask questions first at the GuitarPCB forum.
We are there to help and we know our products best.

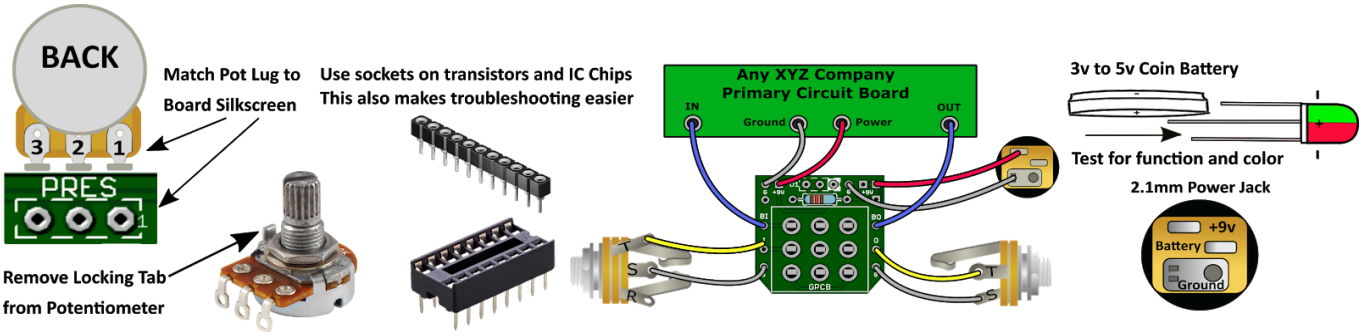

[Soldering Tutorial on Youtube]

Need a kit? Check out our authorized worldwide distributors:

USA – Check out [PedalPartsAndKits] for all your GuitarPCB kit needs in the USA.

Europe – [Das Musikding] Order either boards or kits direct from Europe.

[PedalPartsAustralia] - Order either boards or kits direct from Australia

If they do not have a KIT listed send them a note asking if they can help you out.

This document, PCB Artwork and Schematic Artwork © GuitarPCB.com. Schematic, PCB and this document by Tonmann, Bruce R. and Barry. All copyrights, trademarks, and artworks remain the property of their owners.Distribution of this document is prohibited without written consent from GuitarPCB.com. GuitarPCB.com claims no rights or affiliation to those names or owners.