The Vibe

Do you remember those Vibrolicious Tones inspired by guitar greats like Trower and Hendrix? Now you can build your very own Vibe pedal without the complexity of a large board or huge part count. It requires a perfectly matched quad set of 2N5952 FETs which we carry in the PCB Shop. When built correctly you will have an amazing vibe tone with lots of options! Listen to the Demo which uses both a large flat Knob and 2 Knob Job Mod for instantly adjusting SPEED control.

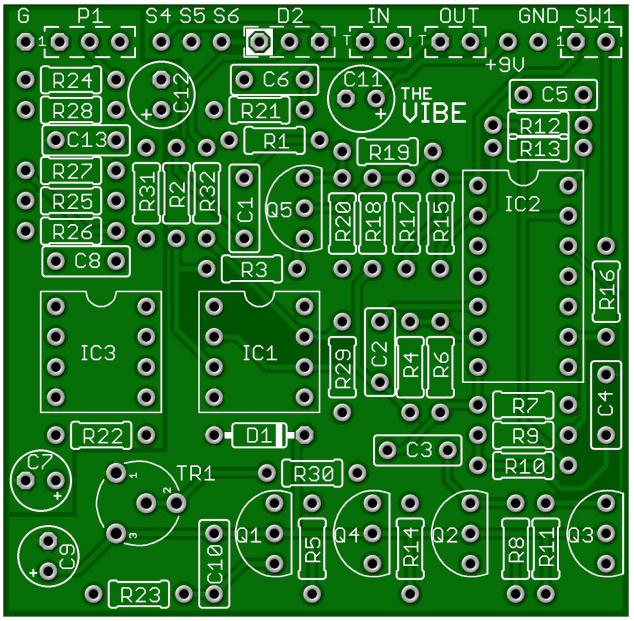

Board Dimensions (W x H) 2.02" x 2.07"

Part	Value
R1	1M
R2	10k
R3	470k
R4	10k
R5	22k
R6	10k
R7	10k
R8	22k
R9	10k
R10	10k
R11	22k
R12	10k

Part	Value
R13	10k
R14	22k
R15	10k
R16	33k
R17	100k
R18	150k
R19	150k
R20	56k
R21	150k
R22	150k
R23	3M9
R24	4k7

Part	Value
R25	470k
R26	150k
R27	22k
R28	22k
R29	10k
R30	1M
R31	100R
R32	3k3
TR1	250k
P1	100k A
SW1	***Open**

Part	Value
C1	10n
C2	6.8n
C3	10n
C4	220p
C5	2.2n
C6	47n
C7	10uF
C8	10n
C9	10uF
C10	47n
C11	100uF
C12	100uF

Part	Value
C13	10n
D1	5.1v Zener Diode
D2	CA Bi-Color LED
IC1	TL071
IC2	TL074
IC3	TL061
Q1 - Q4	**2N5952 - Matched**
Q5	2N4125 - PNP

Important Pre-Build Considerations:

- **Q1 through Q4 – Requires (4) 2N5952's. GuitarPCB has Quality Hand Matched Quad Sets. See our Shop**
- **Q5 - 2N4125 PNP Transistor is also available through GuitarPCB. See our Shop**
- **A large flat knob for the SPEED control is recommended for easy turning with foot. See our Shop.**
- **45/90 Mod (highly recommended.) Requires a DPDT On/On Switch. More info on Page 4. See our Shop.**
- **Speed Shift Mod requires a 2 Knob Job Board and a 3PDT Latched or Momentary switch for "Speed Shift".**
- **5.1v Zener Diode required. See our Shop. *SW1 (no switch required) simply leave these pads open.**
- **Pedal Placement is important. Test completed board alone with a separate PSU or battery. After confirmation that your circuit works then determine where in the pedal chain it sounds best. Pre or Post Distortion.**

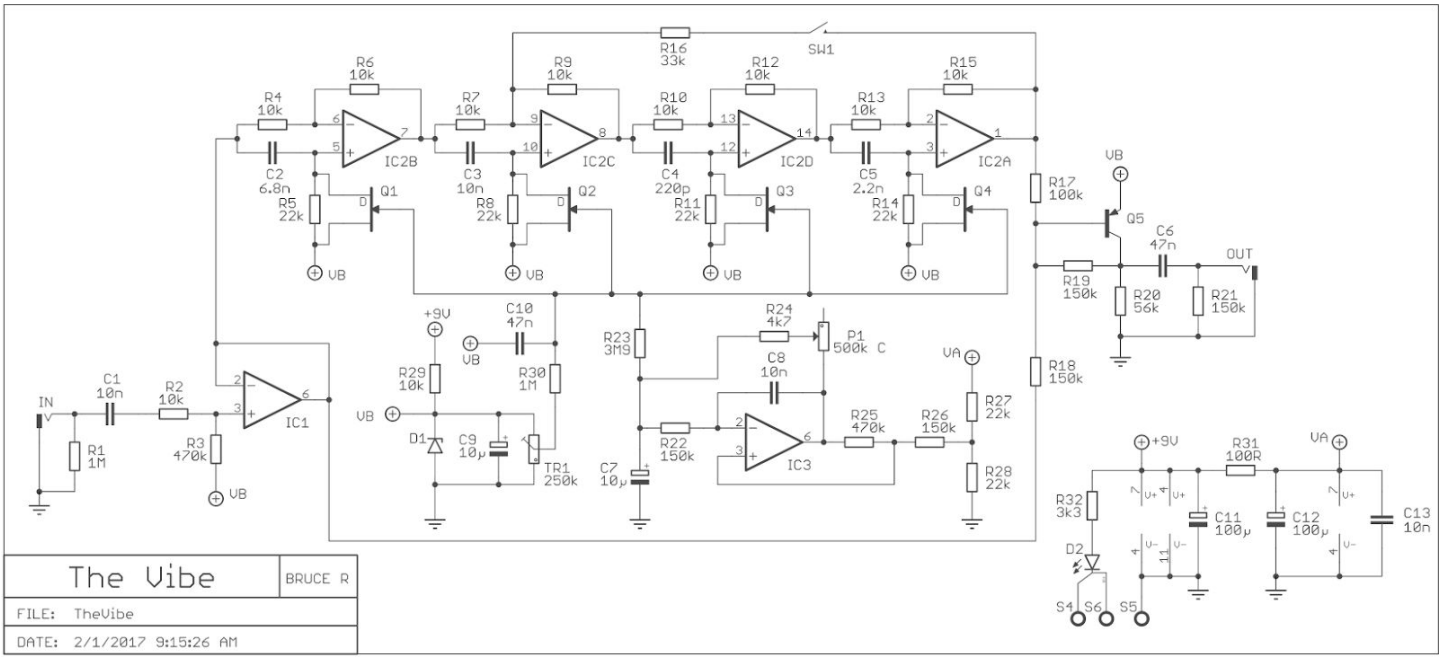

Build Notes:

***There are (two ground pads), G & GND. Both ground pads must be wired to ground for the circuit to function. Connect both directly to the power supply ground for optimal noise free performance.**

Be sure to decide what Mods you wish to perform before building to decide enclosure layout & population. See additional Mod Wiring Charts below. Very special thanks to Wilkie1 for the charts and Mod ideas.

IC1 and IC3 are standard pinout mono op amps. Although any standard mono op amp can be used, a TL071 offers reasonable noise and response specifications, the TL061 is ideal for LFO (Low Frequency Oscillator) applications, its low current characteristics reduce the chances of "ticking" in the audio part of the circuit.

Q5 is a general purpose PNP silicon transistor; possible substitutes are 2N3906, 2N5087, BC559B

TL061, TL071, TL074, 2N5952 Quad Sets and PNP 2N4125 needed for this project are typically available in the our Shop For direct hyperlinks to products (be connected online) and see the bottom of the last page.

STATUS LED

D2 is a common anode bi-color LED. The diagram at right shows the pin-out, schematic symbol and pad connection for a common anode LED. The pin-out for the bi-color LED is typically (but not always) as follows:
The lead 1 pad on the circuit board is marked with a white box.

When connected correctly, the LED will light red when power is applied and the circuit is in bypass mode. The LED will light green when in effects mode. If you wish to use a standard LED, connect the anode to the middle pad and the cathode to the right pad to show the circuit in effects mode. If you use a 3PDT wiring board that includes an LED, you can omit this LED and R32. *R32 is the LED's Current Limiting Resistor (CLR). If you use a different LED, you may want to change this value to adjust LED brightness.

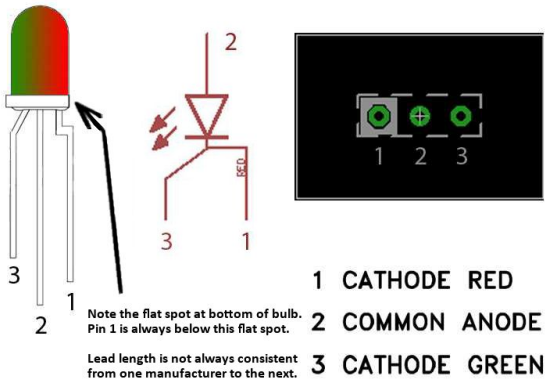

If you are using one of GuitarPCB's handy 3PDT wiring boards, pads S4, S5, S6 and D2 would be ignored and R32 would not be installed. See wiring guide and photos below for reference.

Main Wiring Diagram “No Mods”

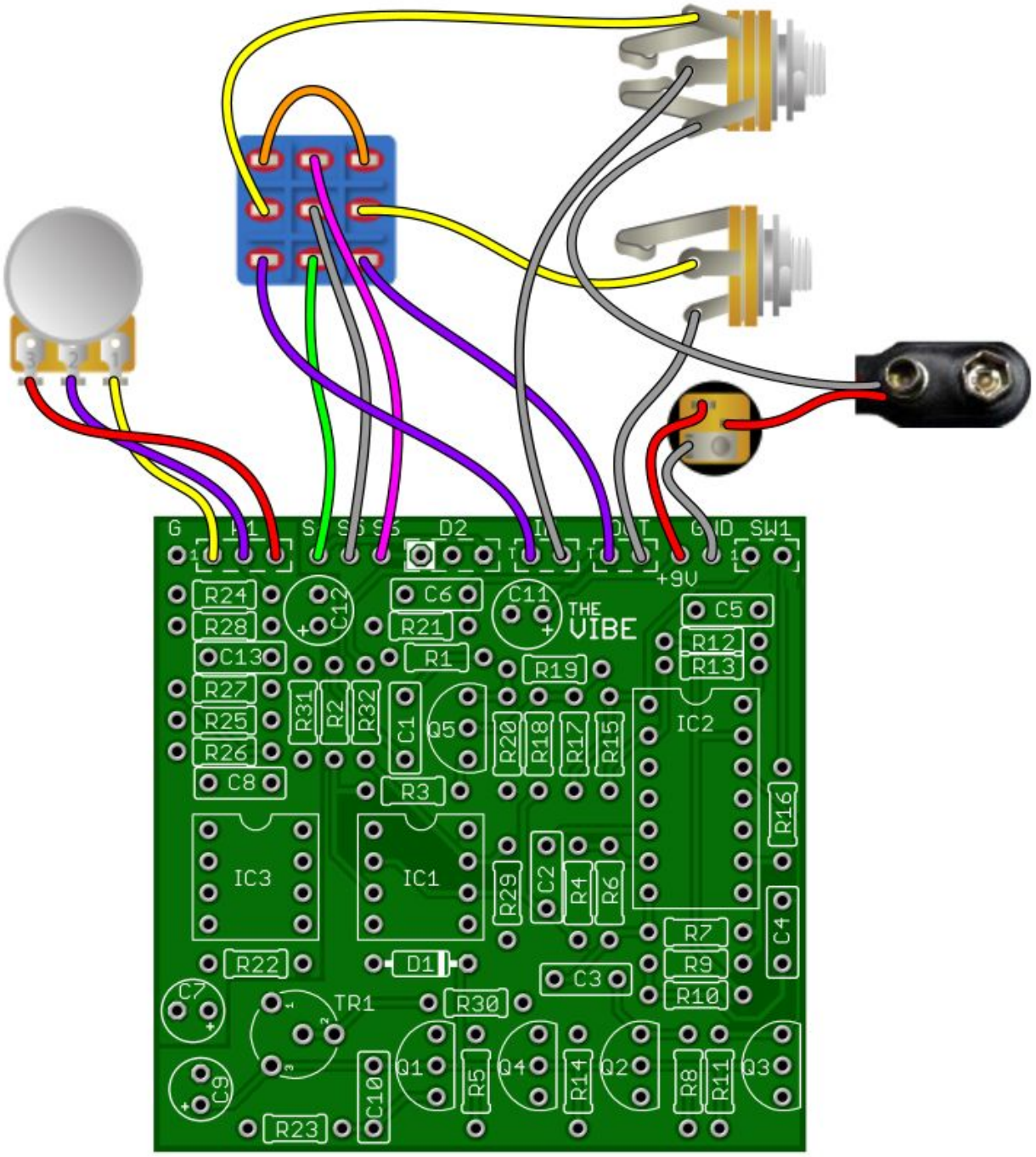

This diagram is recommended for beginners or those that simply want a functioning Vibe Style pedal with the least amount of wiring and to fit in the smallest enclosure.

You will forfeit the “Speed Shift“ mod as well as the “45/90” mod aka, “Full or Half Depth” mod.
The “Speed Shift” mod will require room in the enclosure for one additional foot switch.
The “45/90” mod requires room for a DPDT switch. <u>Decide on this mod before populating R10 and R17</u>.

See “Mod Guides” below. Test circuit using both Grounds (G & GND) before placing in enclosure.

45/90 aka, Full or Half Depth Mod

Decide on this Mod before populating <u>R10</u> and <u>R17</u>

"THE VIBE" usually operates with a phase 90 function. But you can switch it to a phase 45 function simply by adding a DPDT switch. Follow these simple instructions and you will have a totally different tonal palette!

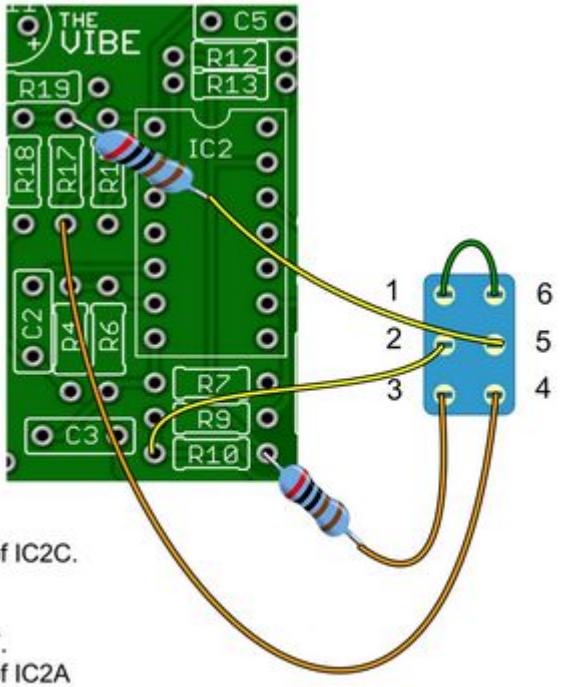

INSTRUCTIONS

1. Lift R10 leg from pad that connects to Pin 8 of IC2C.
2. Connect R10 leg to lug 3 of DPDT.
3. Connect empty R10 pad to lug 2 of DPDT.
4. Add a jumper from lug 1 to lug 6 of the DPDT.
5. Lift R17 leg from pad that connects to Pin 1 of IC2A
6. Connect R17 leg to lug 5 of DPDT.
7. Connect empty R17 pad to lug 4 of DPDT.

OPERATION

When the DPDT switch is connecting lugs 1-2 and 5-6, the Phase 45 feature will be active. SW1 will be inoperative.

When the DPDT switch is connecting lugs 2-3 and 4-5, the normal Phase 90 mode will be active. SW1 will provide signal feedback when closed.

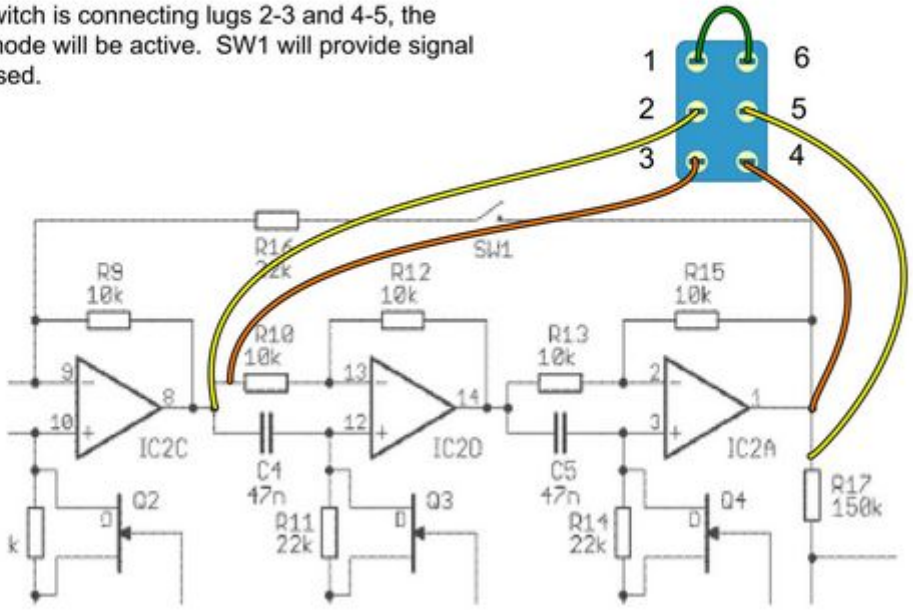

Mod by
wilkie1
2017

The wiring must be exactly as shown above for the mod to function. If you lose Vibe sounds be sure the wiring is correct, the jumper installed and your switch is good.

All Mods and Main Circuit are 100% verified by multiple builders as always.

“SPEED SHIFT” MOD

This will give you the ability to instantly “Shift Speeds” between two favorite settings.

Requires a 2 Knob Job Mod Board, B100k Master Pot,Wire and a B100k "Trim" or Standard Pot

B100K Master Potentiometer

A 3PDT Momentary Foot Swich is also required.
This is mounted to the 2 Knob Job then the enclosure.
A 3PDT Latching Foot Switch may be substituted.
Our 2 Knob Job board accepts 3PDT w/ Solder Lugs.

2 KNOB JOB

B100K RECOMMENDED

Trimmer or Standard Pot may be used.
Mounting holes are available for each.

Note:

NO WIRING NECESSARY FOR LUG 1 ON POTS OR

BETWEEN BOARDS

THE VIBE

Large Flat Speed Knob 1-5/16”

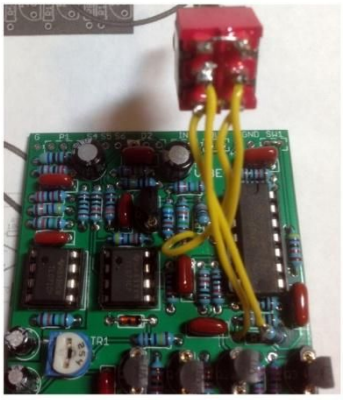

45/90 Mod Photo

Completed Build with 45/90 and Speed Shift Mods

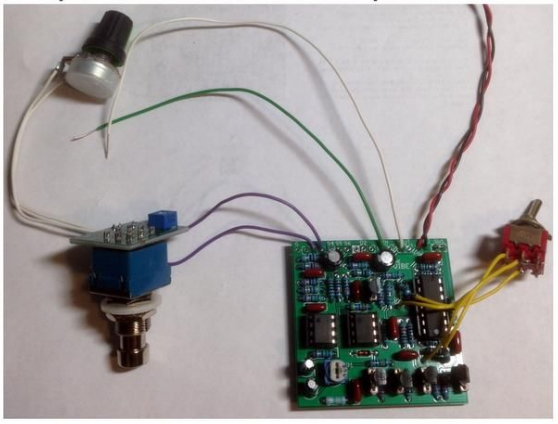

Completed Build Photo Reference

Other important notes:

- Share your finished pedal in the "Show off your Finished Pedal" section of the forum
- A YouTube Demo is available

IC's are easily damaged by heat from soldering and should never be directly soldered to the PCB.

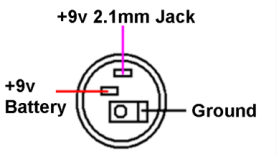

Parts needed for this project typically available in our PCB Shop.

- **Q1 through Q4 – Requires (4) Matched 2N5952's.**
- **Q5 - 2N4125 PNP Transistor.**
- **Large flat knob for operating the SPEED control with your foot.**
- **45/90 Mod requires a DPDT On/On Switch.**
- **Speed Shift Mod requires 2 Knob Job Board & Momentary 3PDT Switch**
- **A 5.1v Zener Diode is required.**
- **Speed Shift Mod may require a 100K Trimmer.**
- **Bi-Color LEDs or a Standard LED may be used.**
- **3PDT Wiring Board will save a lot of wiring, clutter and avoid needing the Star Ground method**
- **Finally you will need a TL071, TL074 and TL061.**

Soldering Tutorial on Youtube

Need a kit? Check out our authorized worldwide distributors:

USA – Check out PedalPartsAndKits for all your GuitarPCB kit needs in the USA.

Europe – Das Musikding Order either boards or kits direct from Europe.

PedalPartsAustralia - Order either boards or kits direct from Australia

If they do not have a KIT listed send them a note asking if they can help you out.

This document, PCB Artwork and Schematic Artwork © GuitarPCB.com. Schematic, PCB and this document by Bruce R. and Barry. All copyrights, trademarks, and artworks remain the property of their owners.Distribution of this document is prohibited without written consent from GuitarPCB.com. GuitarPCB.com claims no rights or affiliation to those names or owners.