GuitarPCB.com

Mini-Me Chorus 2020 New MN3007/3207 Version

This design will fit into a 1290NS/1590B size enclosure or larger. We recommend a 125B enclosure or larger. This compares to the popular Small Clone™ chorus, but includes many additional **HQ modifications.** The addition of a Depth knob provides more flexibility. Use either the **MN3007** or **Cool Audio v3207** chip which is easier to find. Additionally this project contains two separate ground planes making this a **superior chorus circuit** for both quality sound and **noise free operation**. As a result both **GND (bottom) and G2 (top left)** require being grounded.

Note: If you have an earlier version of the **Mini-Me** you can download that Build Document directly from our **Guides Page**.

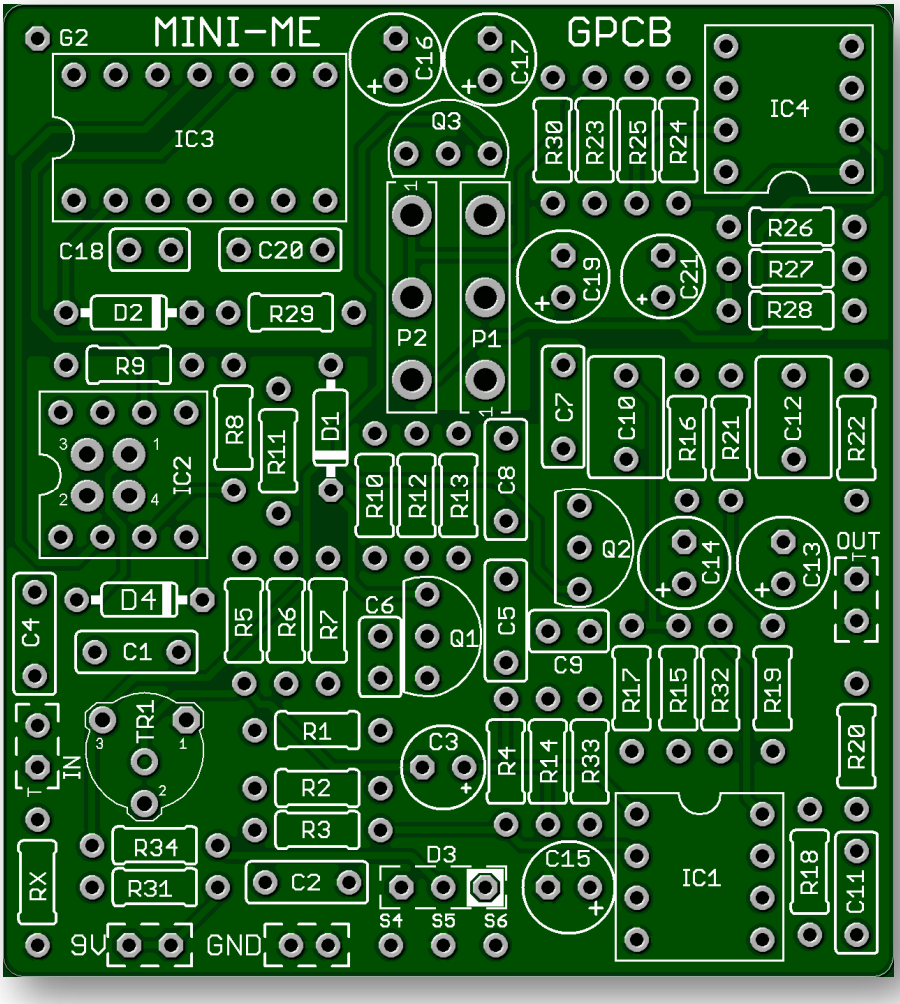

Board Dimensions (W x H) 2.08 x 2.32 inches, i.e.: 54 x 59mm.

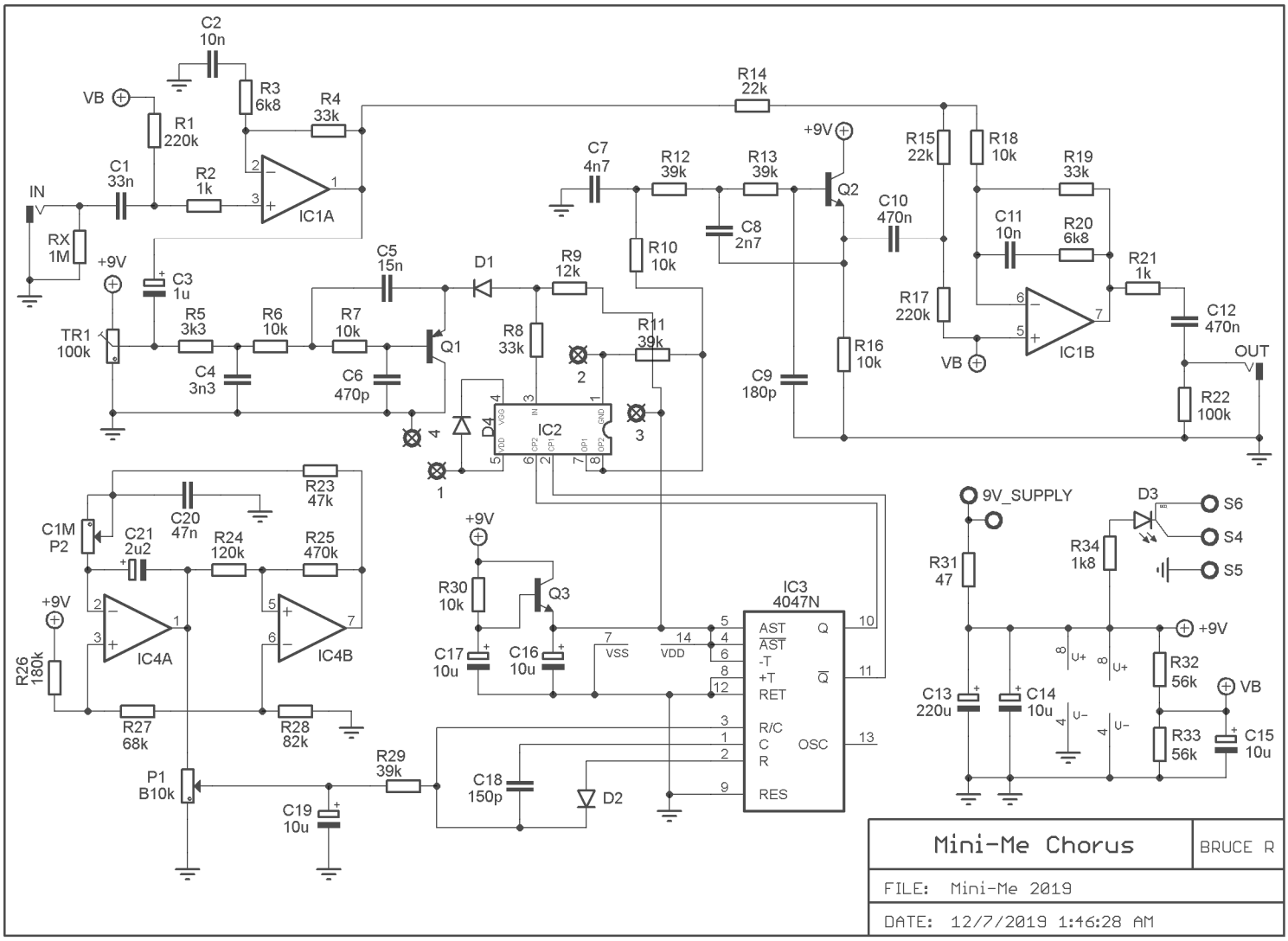

IMPORTANT NOTES

- The **MN3007 IC** is no longer produced but may be available from Small Bear. Please note a 3207 version like the **CoolAudio V3207 IC** can now be used with this board with the addition of a Jumper Pair section on the back and the D4 diode. **See Page 4 of this document regarding use of MN3007 vs V3207 ICs**.
- This board has **2 separate ground planes** to prevent audible clock noise. Both ground planes need to be connected. Please make sure that pads **GND and G2** are both grounded. **This makes for a superior Chorus circuit.**
- This board has 16mm PCB-mounted potentiometers, which mount to the under-side of the board. We highly recommend that you mount the pots in your drilled enclosure, and then fit the board onto the pots, and solder them together. Absolutely do not solder the pots to the board and then force the pots into the holes, or you may break the circuit board. If you prefer, you may also hand wire pots and arrange the knobs in your enclosure to suit your personal preferences.

***TR1 -** The trimmer potentiometer is for biasing the output of IC1A and should be adjusted by ear until the chorus effect is most pronounced. This is a fine setting and is usually close to the center position.

STATUS LED - **D3** is a common anode bi-color LED.

PARTS LIST

Part	Value
D1	1n914
D2	1n914
RX	1M
R1	220k
R2	1k
R3	6k8
R4	33k
R5	3k3
R6	10k
R7	10k
R8	33k
R9	12k
R10	10k
R11	39k
R12	39k
R13	39k
R14	22k
R15	22k
R16	10k
R17	220k
R18	10k
R19	33k
R20	6k8
R21	1k
R22	100k

Part	Value
R23	47k
R24	120k
R25	470k
R26	180k
R27	68k
R28	82k
R29	39k
R30	10k
R31	47 ohm
R32	56k
R33	56k
R34	1k8
IC1	4558
IC2	*MN3007/V3207
IC3	CD4047
IC4	LM358N
Q1	2N5087
Q2	2N5088
Q3	2N5088
C1	33n
C2	10n
C3	1u

Part	Value
C4	3n3
C5	15n
C6	470p
C7	4n7
C8	2n2
C9	180p
C10	470n
C11	10n
C12	470n
C13	220u
C14	10u
C15	10u
C16	10u
C17	10u
C18	150p
C19	10u
C20	47n
C21	2u2
P1	DEPTH: B10k
P2	RATE: C1M
TR1	100k (see text)
D3	Status LED
D4	1N4148 with 3207 Jumper with MN3007 **See Page 4 for details**

MN3007 vs Cool Audio V3207 BBD IC

In early 2020, we introduced a new version of this circuit board, which added the ability to use a 3207 IC or the MN3007 IC. **Please use the corresponding section below depending on the IC you are using in your build.** A big thanks to Dimitris Diamantidis for his help adding the new 3207/3007 section. Aside from the new jumper pads and adding D4, the circuit board is essentially identical to the previous "MN3007-only" version.

If you are using an **MN3007**:

You will need 3 jumpers. Jumpers are just short wires (you can use the cut-off leads from a resistor or diode, etc.). For the MN3007, you need to populate the location on the circuit board for D4 with a jumper. This IC does not require a diode in D4. If you have already put a 1n4148 diode in D4, the circuit will still work with the MN3007, but a jumper is preferable. Additionally, you will need to put jumpers in the holes in the middle of the IC2 chip location. On the back of the circuit board, you will see the orientation of the jumpers indicated right next to the JMP box. We have added red lines for emphasis to show the correct orientation for the MN3007:

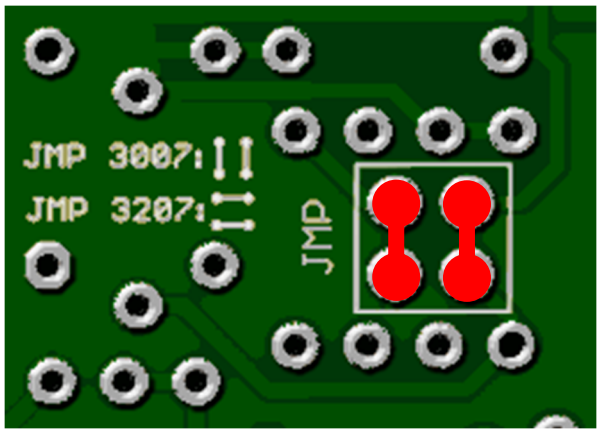

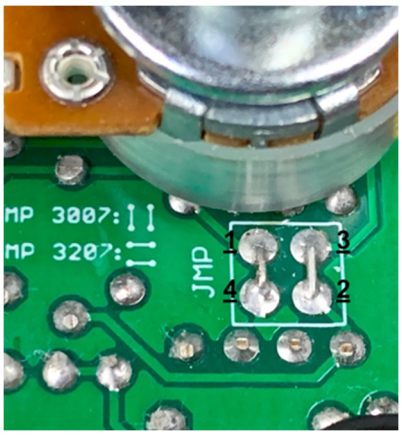

If you are using a **V3207**:

You will need 2 jumpers and a 1n4148 diode. Jumpers are just short wires (you can use the cut-off leads from a resistor or diode, etc.). For the V3207, there is a requirement that the voltage be slightly lower on pin 4, so the diode is used to adjust the voltage (the diode's forward voltage drop or Vf is about .7 volts). So as listed in the parts list above, you need to populate the location on the circuit board for D4 with a 1n4148. Additionally, you will need to put jumpers in the holes in the middle of the IC2 chip location. On the back of the circuit board, you will see the orientation of the jumpers indicated right next to the JMP box. We have added blue lines for emphasis to show the correct orientation for the V3207:

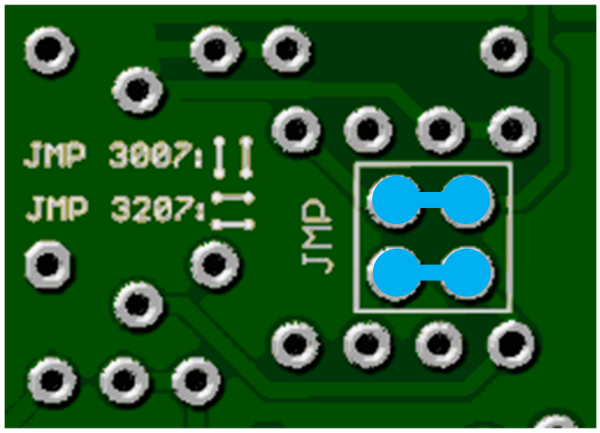

We usually have the **Cool Audio v3207** chip in-stock at the GuitarPCB.com online shop.

WIRING DIAGRAM

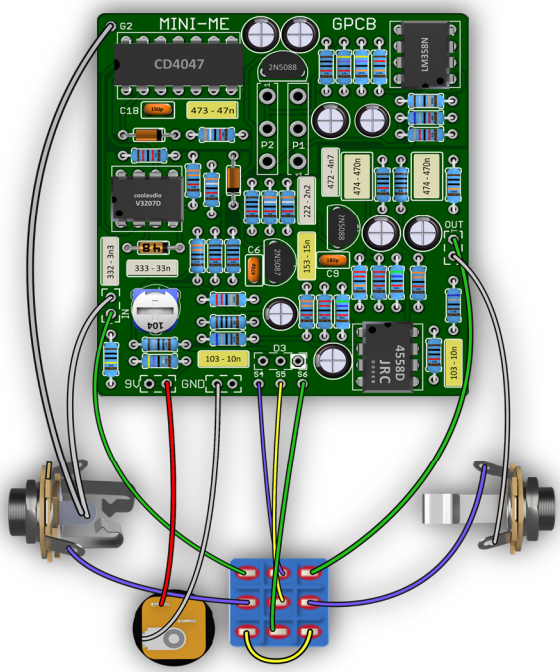

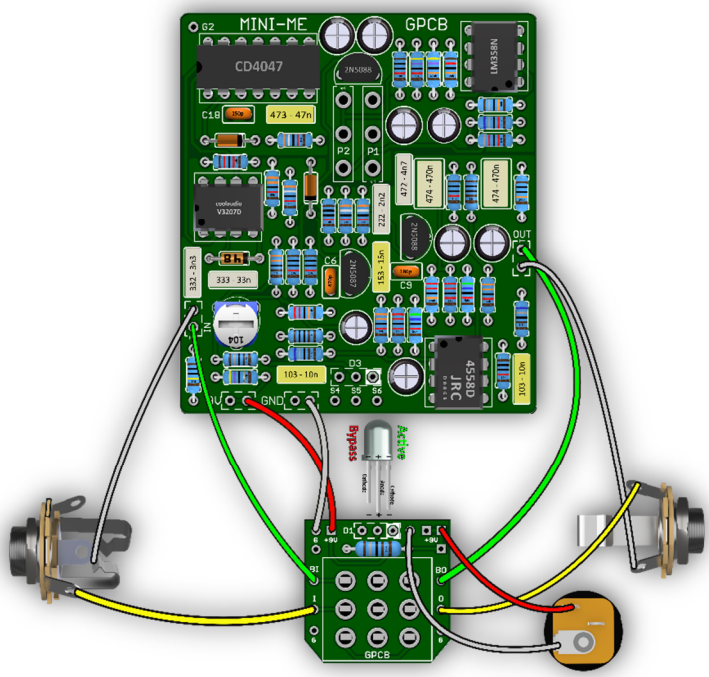

Be sure your In/Out Jack wiring is correct. A Stereo Jack (for battery use only) has a RING lug which is used to connect to the battery ground. If you do not intend to use a battery there is no need for a Stereo Jack. If using Stereo then only use the Tip and Sleeve lugs. S4, S5 & S6 is only needed when the LED is wired to the Main Board.

If using our convenient 3PDT Wiring Boards (below) here is an LED wiring guide. You may use Common Anode Bi-Color or Standard On/Off. The wiring boards use the same symmetrical layout as if wiring straight to the switch.

STATUS LED

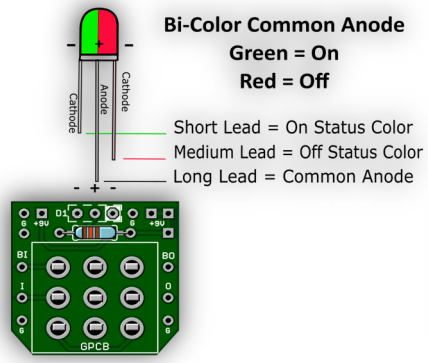

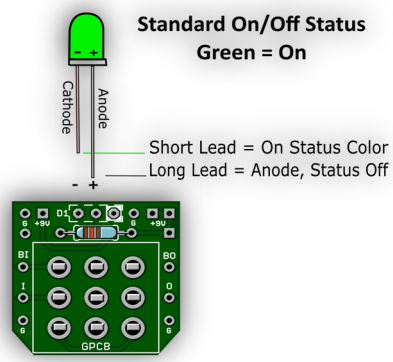

Note: If wiring the LED to our 3PDT board no need to connect S4, S5 & S6 or populate D3 or R34 (CLR) on the main board since you are wiring your LED directly to our board.

DRILLING GUIDANCE FOR POTS and LED

When printed, the border of the board should measure 2.08 x 2.32 inches, i.e.: 54 x 59mm.

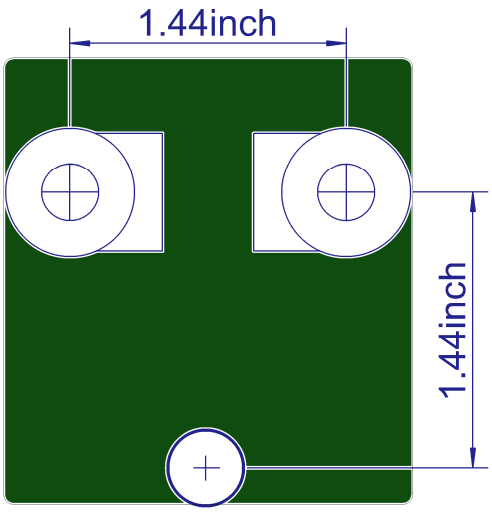

This drawing shows the spacing between centers of the pots, and the distance of the LED pads from the center of the pots. Hole diameters are not exact in this image, so please measure your components before selecting a drill bit. We recommend drilling the pot holes, mounting the pots in the enclosure, and then soldering the pots to the board. This approach should resolve the issue of the pots not fitting through the holes after soldering. We also recommend you make the holes for the pots a little larger than the threads in case you decide to remove the board and put it back in during the build, to avoid problems. Use this guide at your own risk. Be sure to make sure page scaling is turned off when you print this PDF, or the image above may be smaller than expected.

The Wilkie1 Flangery Cap Mod - Sold separately. - Get four awesome variants of chorus tone from one build.

The image below shows off our **Mini-Me Cap mod** by Wilkie1 which requires our **Roto-Tone board** to replace the Cap position of **C18** on the Main Board. Now you have a wide array of **Chorus to Flangery** type sounds. Values we used were **47p, 220p, 330p & 470p**. For more details see next page or please consult our forum. **Thanks to Mark Davis for the Image Photo and build verification. Please note that our kit providers typically do not include mods such as these with kits.**

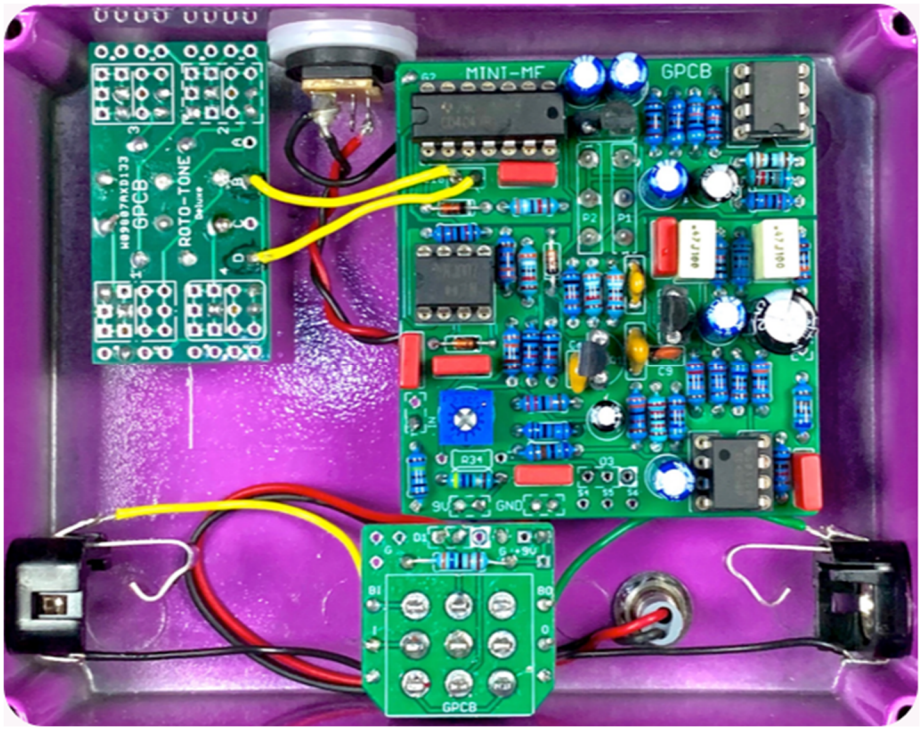

MINI-ME CAP MOD

This popular mod replaces C18 150p with a selection of 4 different cap values.

The jumpers on the ROTO-TONE board may be installed on the opposite side from the switch since all pads are plated through.

You may use ceramic, MLCC or film capacitors.

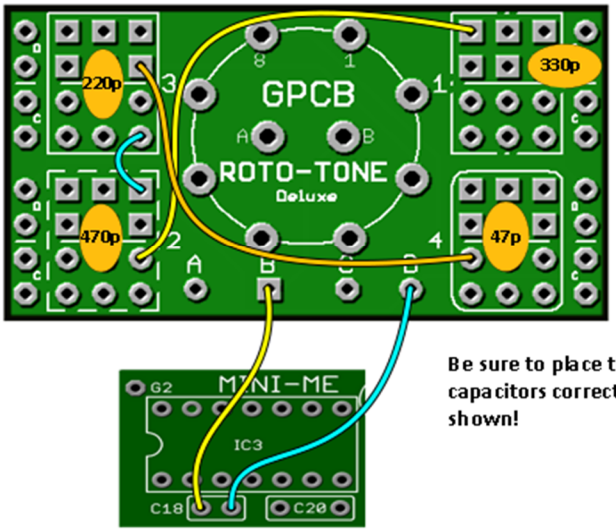

Be sure to place the capacitors correctly as shown!

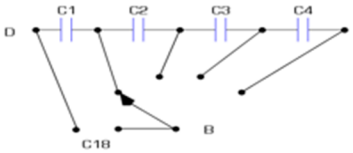

Since the capacitors are wired in series, the ROTO-TONE DELUXE decreases the capacitor total value as the switch is advanced. The resulting values are:
position 1: 330pf position 2: 194pf position 3: 103 pf position 4: 32pf
These values are calculated by:

$$C_T = \frac{1}{\frac{1}{C_1} + \frac{1}{C_2} + \frac{1}{C_3} + \cdots + \text{etc.}}$$

[Soldering Tutorial on YouTube]

For more detailed pedal building guides, charts and tutorials please see our [Guides Page] in the Forum.

Need a kit? Check out our authorized worldwide distributors:

USA – Check out [PedalPartsAndKits] for all your GuitarPCB kit needs in the USA.

Europe – [Das Musikding] Order either boards or kits direct from Europe.

[PedalPartsAustralia] - Order either boards or kits direct from Australia.

This document, PCB Artwork and Schematic Artwork © GuitarPCB.com. Version 2 Schematic, PCB and this document by Bruce R and Barry. Distribution of this document is prohibited without written consent from GuitarPCB.com. Small Clone™ is a trademark of Electro Harmonix® and Tonepad™ is a trademark of Tonepad.com. Any trademarks and names mentioned above belong to their respective owners. GuitarPCB.com claims no rights or affiliation to those names or owners.