GuitarPCB.com

Guitar/Bass Driver v3

The Guitar/Bass Driver contains (9) transistors to deliver a larger-than-life tube-like tone found in old Ampeg™ style amps.

This circuit will make your Bass come alive and growl, but it also sounds amazing for your 6-string Guitar. It will deliver a natural-sounding tube-style breakup as you turn the gain up full. If you enjoy turning your gain to 10, finding a sweet spot position is easy using the volume and boost controls at 70-80% rotation, which will yield maximum drive with plenty of headroom.

Five Controls – Gain, Bass, Treble, Volume & Boost/Enhancement

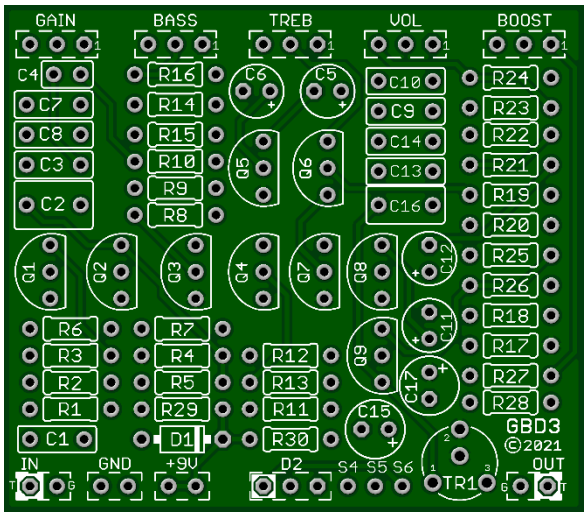

Dimensions: 2.12' X 1.87"

Part	Value
R1	2M
R2	1M
R3	47k
R4	1M
R5	1M
R6	22k
R7	200k
R8	4k7
R9	*22k
R10	100k
R11	1M
R12	1M

Part	Value
R13	2k
R14	100k
R15	4k7
R16	200k
R17	1M
R18	1M
R19	10k
R20	4k7
R21	10k
R22	10k
R23	100k
R24	100k

Part	Value
R25	33k
R26	1M
R27	*22-33k
R28	1k
R29	47R
R30	*1k8
C1	*100n
C2	470n
C3	*100n
C4	47p
C5	1u

Part	Value
C6	4u7
C7	1n
C8	4n7
C9	1n
C10	10n
C11	4u7
C12	4u7
C13	2n2
C14	2n2
C15	22u
C16	*100n
C17	100u

Part	Value
TR1	20k
D1	1n4001
D2	Status LED
TREB	A1M
VOL	B100k
BASS	A1M
BOOST	A100k
GAIN	A1M
Q1 - Q8	2N5457
Q9	J113

Build Notes on Modifications:

***R27** uses a value from 22k to 33k. 33k will start the rotation with the most amount of Boost /Enhancement. 22k will start attenuating very slightly. Any value between 22k and 33k will work absolutely fine.

***R30** – 1k8 is the CLR (current limiting resistor) for the Status LED. This is bright. Higher value will be dimmer.

***C1, C3 & C16** – 100n. These are coupling capacitors and can be raised to 220n if you want even more Bass.

SCHEMATIC

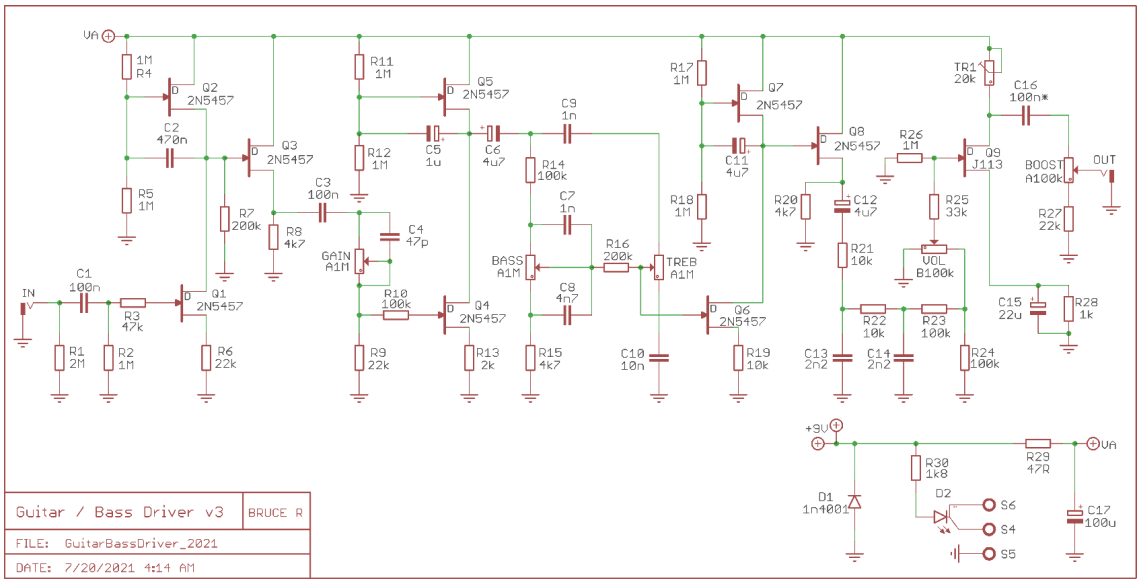

Build Notes:

- This build has values of **47R** (Ohm), **4.7k** (4k7), and **47k** – Please be careful not to mix these up!
- **R9** may be Modded. It allows for additional Gain control. Lower to 15k for less. Raise to 27k for more.
- **TR1 Bias Trimpot** - Adjust the Bias by using a DMM and placing the Red Probe on the Drain lead of Q9 and Black probe on any ground. Adjust TR1 till you get between 4.5v and 6v.

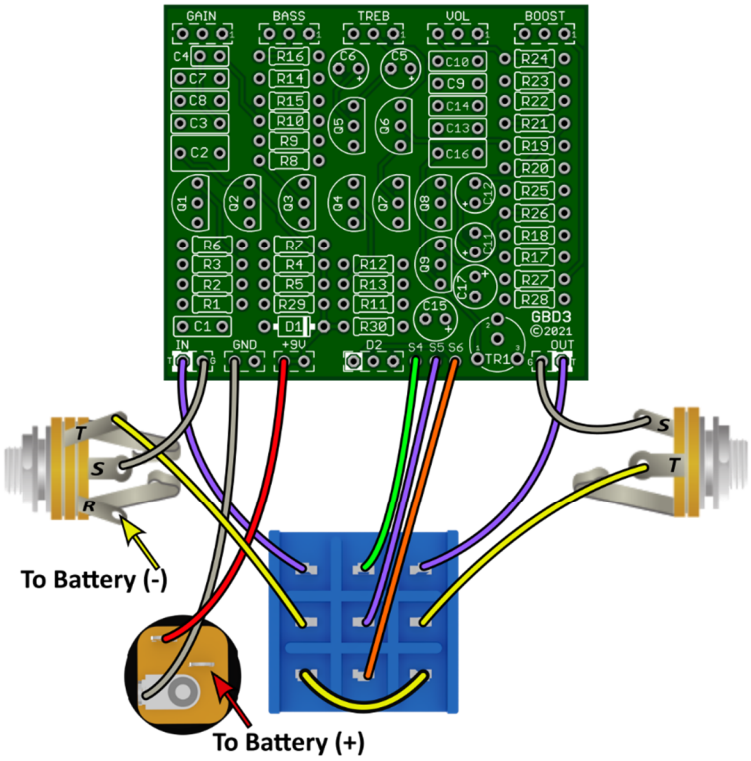

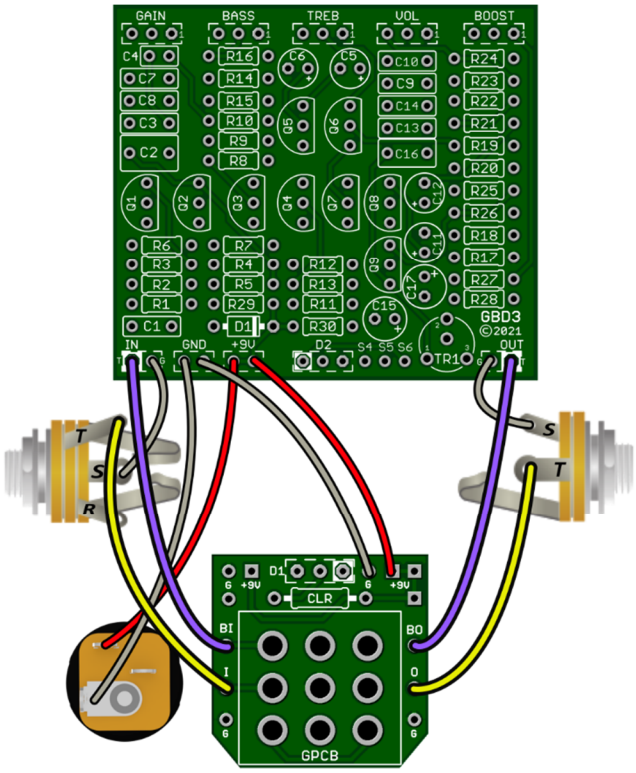

Be sure your In/Out Jack wiring is correct. A Stereo Jack (for battery use only) has a RING lug which is used to connect to the battery ground. If not using a battery there is no need for a Stereo Jack. If using Stereo then only use the Tip and Sleeve lugs. S4, S5 & S6 is only needed when the LED is wired to the Main Board.

If using our convenient 3PDT Wiring Boards (below) here is an LED wiring guide.

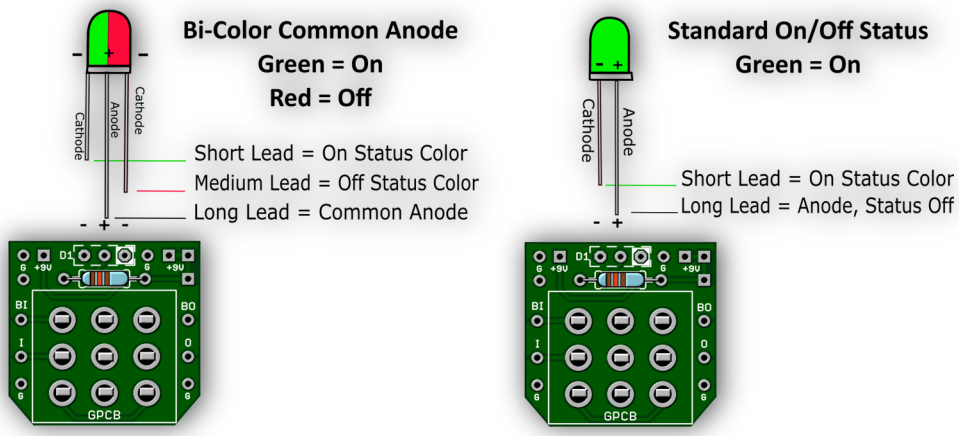

Note: If wiring the LED to our 3PDT board no need to connect S4, S5 & S6 or populate D2 or R30 (CLR) on the main board since you are wiring your LED directly to our board.

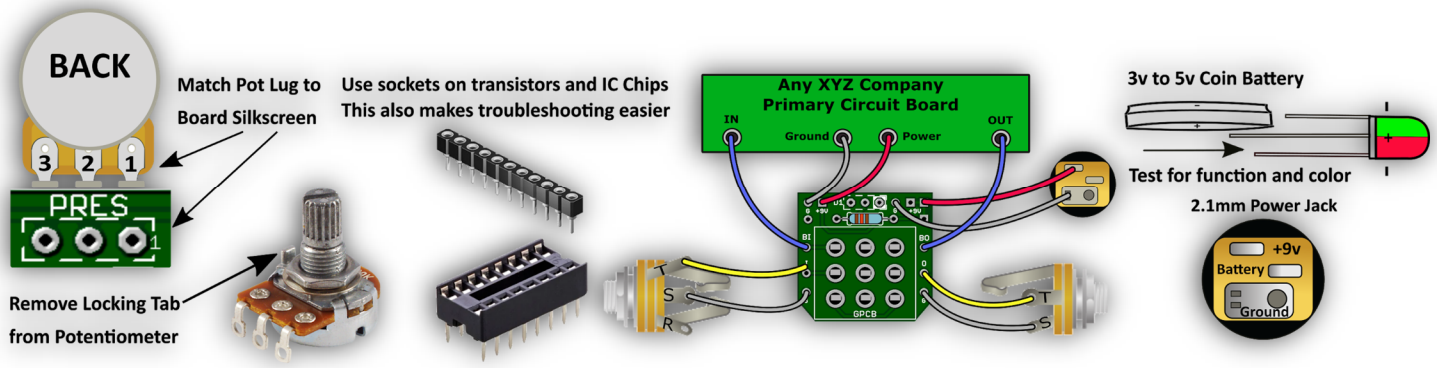

Need a kit? Check out our authorized worldwide distributors:

USA – Check out PedalPartsAndKits for all your GuitarPCB kit needs in the USA.

Europe – Das Musikding Order either boards or kits direct from Europe.

PedalPartsAustralia - Order either boards or kits direct from Australia

If they do not have a KIT listed send them a note asking if they can help you out.

This document, PCB Artwork and Schematic Artwork © GuitarPCB.com. Schematic, PCB and this document by Bruce R. and Barry. All copyrights, trademarks, and artworks remain the property of their owners. Distribution of this document is prohibited without written consent from GuitarPCB.com. GuitarPCB.com claims no rights or affiliation to those names or owners.