SHO’ Nuff v3

Build either the classic one knob version or the more functional, modern two knob version.

We have added a Master Volume Control. This is handy for Cranking the Crackle knob so you can squeeze out all of the tone without the added volume!

Note: v2 wiring diagram last page.

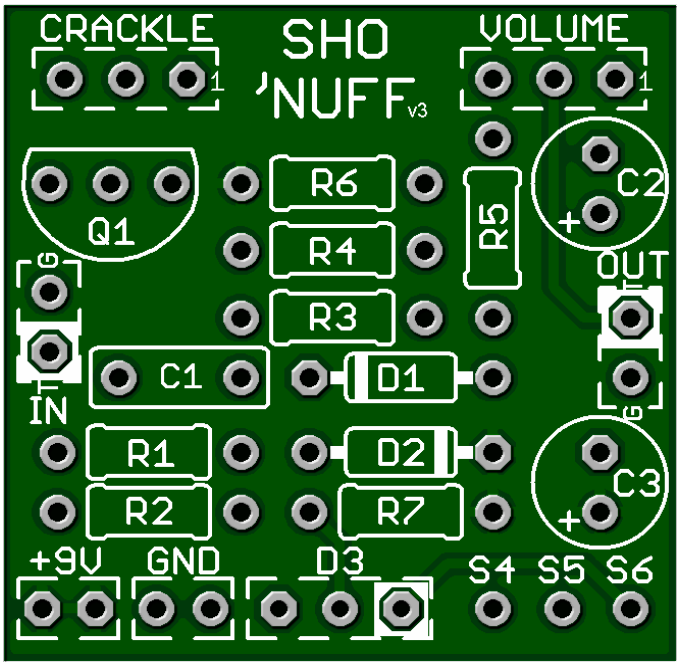

Board Dimensions (W x H): 1.10” x 1.10”

Part	Value
R1	33k
R2	1M
R3	10M
R4	10M
R5	100K
R6	5k1
R7	3k3
D1	1N4148
D2	1N4148

Part	Value
C1	100n
C2	10u
C3	47u
D3	Bi-Color LED C.A.
P1-Crackle	C5k
P2-Volume	A100k
Q1	BS170
SW1	3PDT

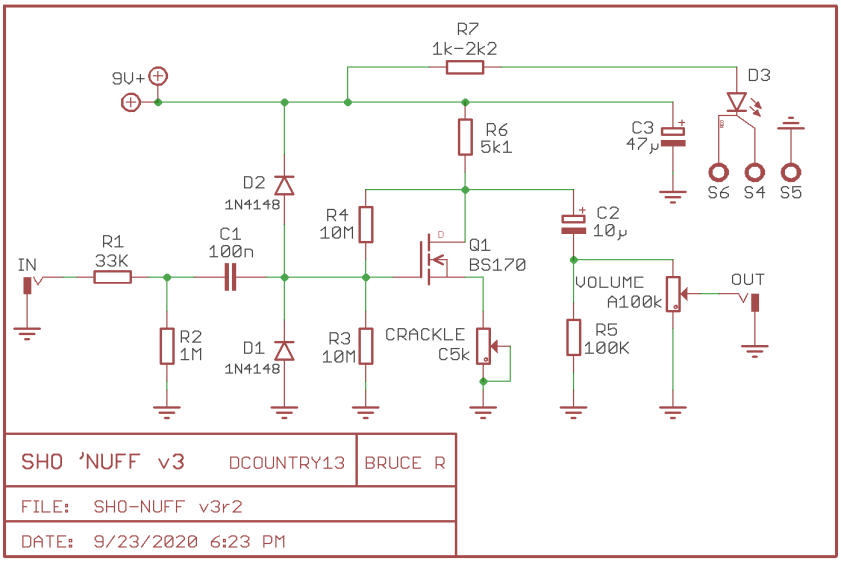

Mod: **If you do not wish to install the Volume Pot (P2) simply Jumper pads 2-3 together on the main board.**

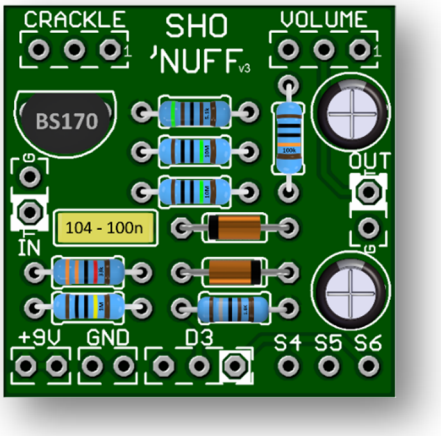

STATUS LED

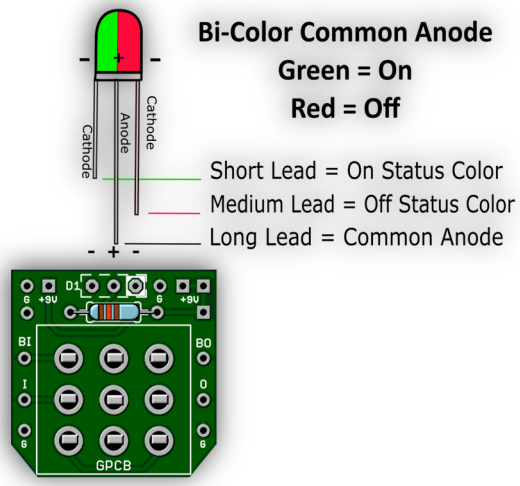

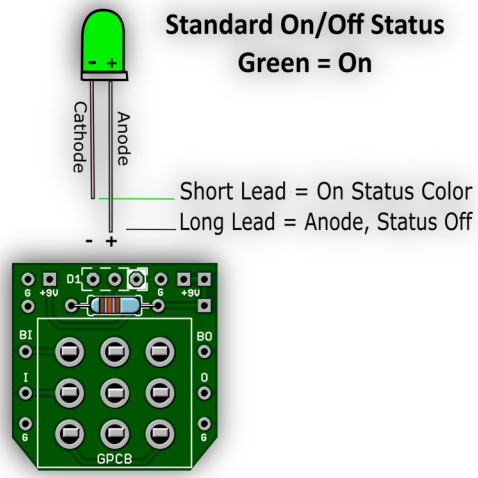

Note: If wiring the LED to our 3PDT board no need to connect S4, S5 & S6 or populate D3 or R7 (CLR) on the main board since you are wiring your LED directly to our board.

Wiring Diagrams

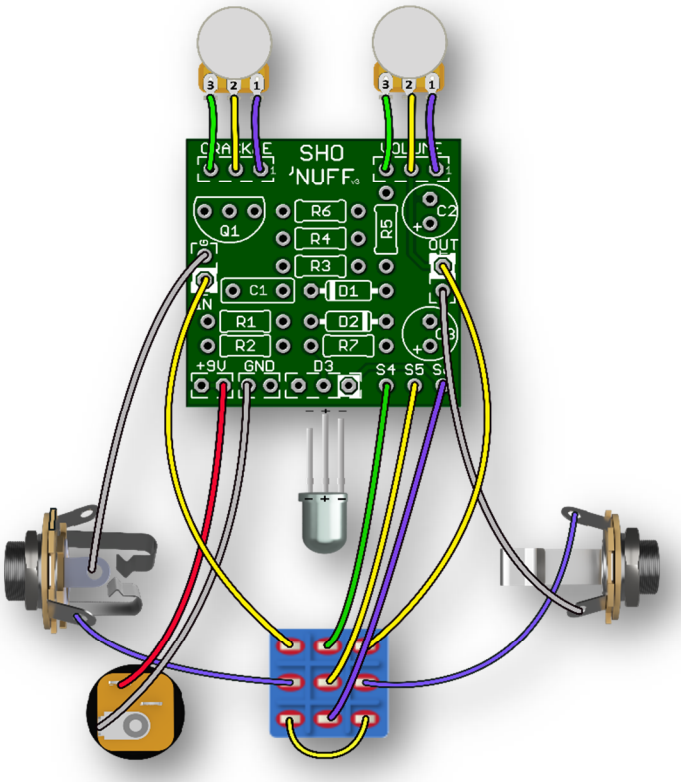

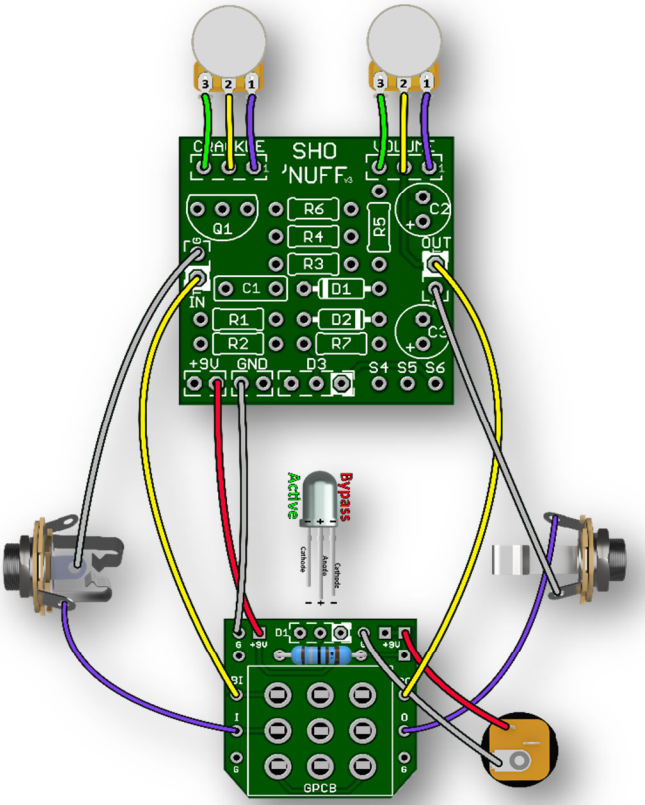

Be sure your In/Out Jack wiring is correct. A Stereo Jack (for battery use only) has a RING lug which is used to connect to the battery ground. If you do not intend to use a battery there is no need for a Stereo Jack. If using Stereo then only use the Tip and Sleeve lugs. S4, S5 & S6 is only needed when the LED is wired to the Main Board.

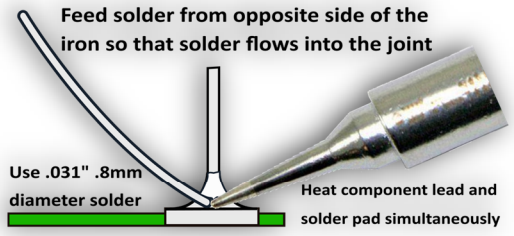

A good solder joint should be shiny and look like this:

* Carefully re-flow suspect solder joints.
* Clean and tin your Tip regularly.

When soldering wire to the board push the protective PVC jackect flush with the board and pad.

Use the right tools for the job and be patient.
If you need help ask questions first at the GuitarPCB forum.
We are there to help and we know our products best.

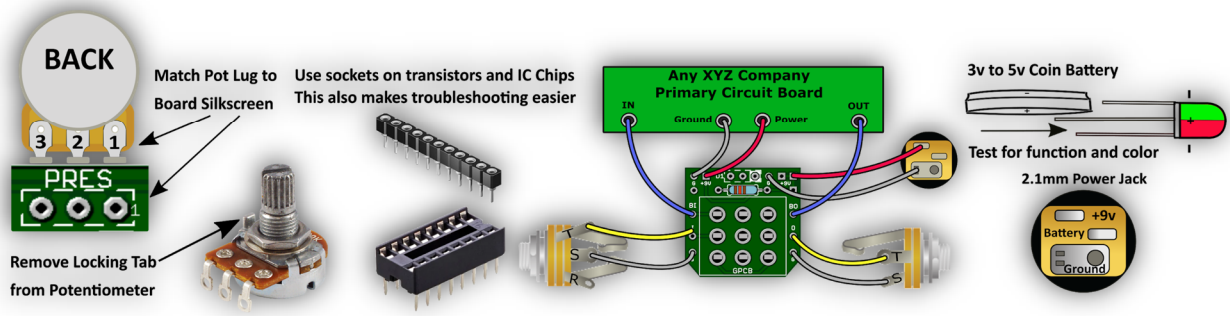

Wiring Diagram for v2

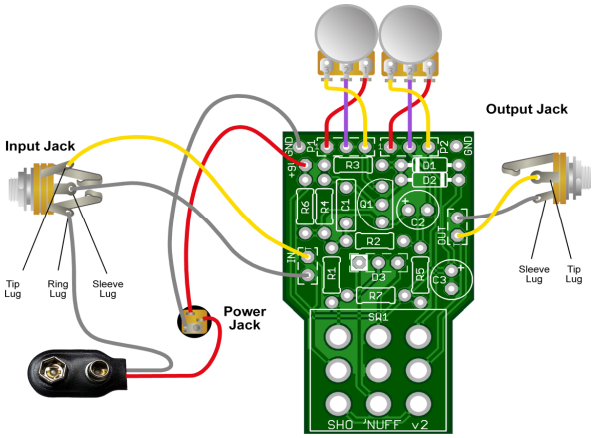

Enclosure Warning

If you use a 1590A, 1590B, 1290NS or any other shallow enclosure, **you must plan carefully.** You may need to mount the 3PDT switch on the same side as the components, so that when you insert the populated board into the enclosure, you are looking at the back of the board, not the component side. Otherwise, you may end up with a problem with components sticking too high out of the enclosure so the back will not screw on **(see problem in picture example below)**.

We suggest mounting short items (resistors and diodes) on the top of the board, and put the 3PDT switch and all taller components (Electrolytic and Film capacitors) on the underside, however **pin orientation is critical** on components like transistors, diodes and polarized caps. **Be sure to drill your enclosure so that other components such as audio jacks and pots do not interfere with board components.** Plan carefully, or use a 125B or other deeper enclosure!

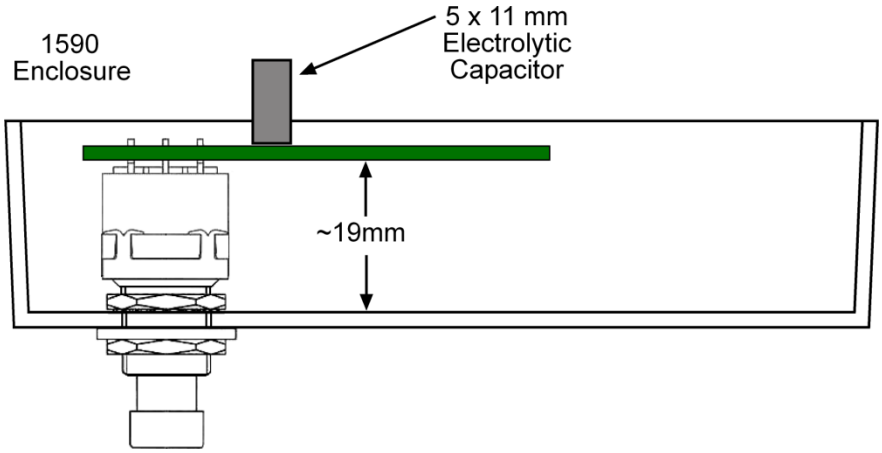

Need a kit? Check out our authorized worldwide distributors:

USA – Check out PedalPartsAndKits for all your GuitarPCB kit needs in the USA.

Europe – Das Musikding Order either boards or kits direct from Europe.

PedalPartsAustralia - Order either boards or kits direct from Australia

If they do not have a KIT listed send them a note asking if they can help you out.

This document, PCB Artwork and Schematic Artwork © GuitarPCB.com. Schematic, PCB and this document by DCountry13, Tonmann, Bruce R. and Barry. All copyrights, trademarks, and artworks remain the property of their owners. Distribution of this document is prohibited without written consent from GuitarPCB.com. GuitarPCB.com claims no rights or affiliation to those names or owners.