Mastodon Fuzz V3 & V4

SERIOUSLY HUGE FUZZ! Defined controls that yield massive fuzz that both bites and growls. The Pinch control is where this pedal really shines. Thunderous gated tones or smooth Fuzz Face like tones are easily dialed in. The EQ allows full control of both bass and six string guitars. This circuit is waiting for your Bass or 6-string.

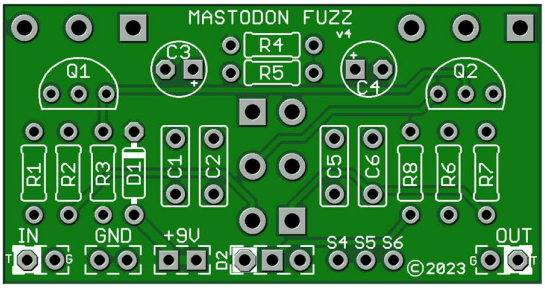

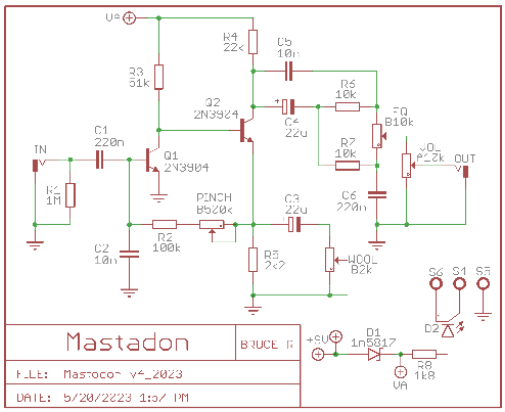

V4 above and V3 below - Board Dimensions (W x H) 1.95” x 1.00”

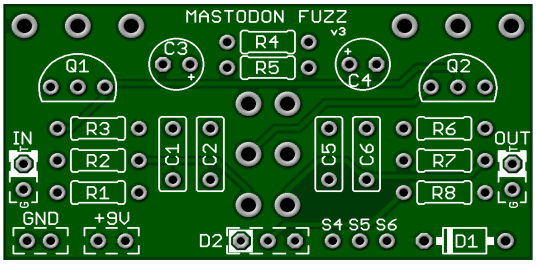

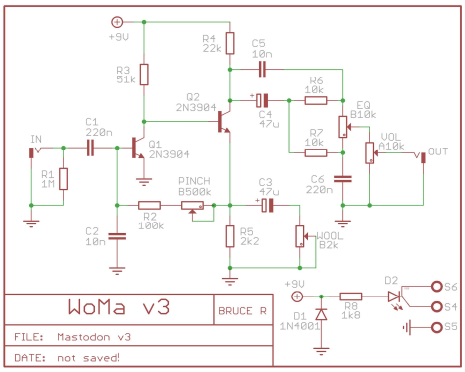

R1	1M	C1	220n	Q1	2N3904
R2	100k	C2	10n	Q2	2N3904
R3	51k	C3	47µ		
R4	22k	C4	47µ	PINCH	500k Lin
R5	2k2	C5	10n	WOOL	2k Lin
R6	10k	C6	220n	EQ	10k Lin
R7	10k	D1	V4 - 1N5817.	VOLUME	10k Log
*R8	3k3	D1	V3 - 1N4001	D2	CA Bi-color LED

Build Notes

The only difference between V3 and V4 is that V4 incorporates the 1N5817 circuit protection scheme. There is a slight difference in the cosmetic placement of resistors, and square pads but the schematic is identical.

D1 is a reverse polarity protection. **D2** is an option to use the board to hold the Bi-color status LED.
R8 – Current Limiting Resistor for on-board Bi-color LED. Anything from 1k8 to 4k7 for a dimmer light.

Want to take this circuit to the next level? Try our Buff N Blend to dial in any amount of Clean signal.

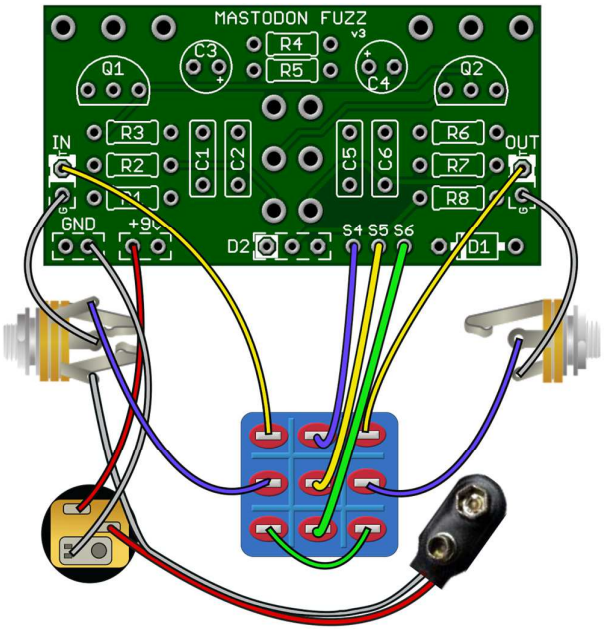

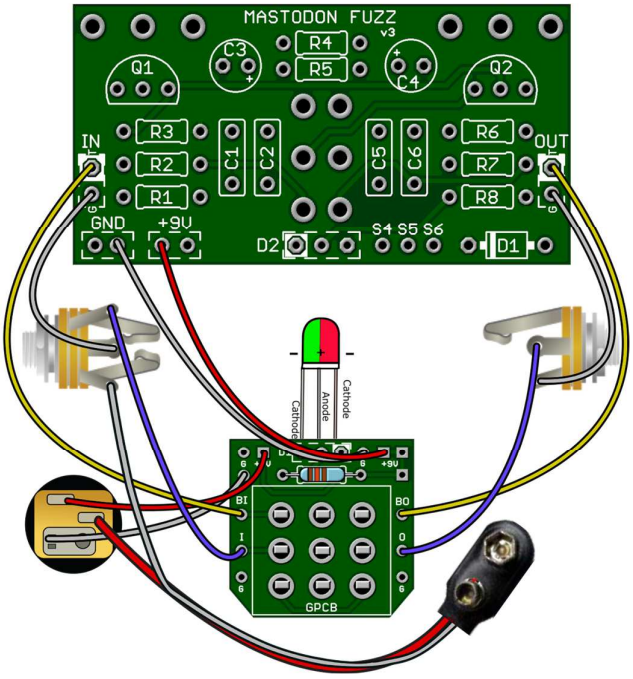

Be sure your In/Out Jack wiring is correct. A Stereo Jack (for battery use only) has a RING lug which is used to connect to the battery ground. If you do not intend to use a battery there is no need for a Stereo Jack. If using Stereo then only use the Tip and Sleeve lugs. S4, S5 & S6 is only needed when the LED is wired to the Main Board.

If using our convenient 3PDT Wiring Boards (below) here is an LED wiring guide. You may use Common Anode Bi-Color or Standard On/Off. The wiring boards use the same symmetrical layout as if wiring straight to the switch.

<u>STATUS LED</u>

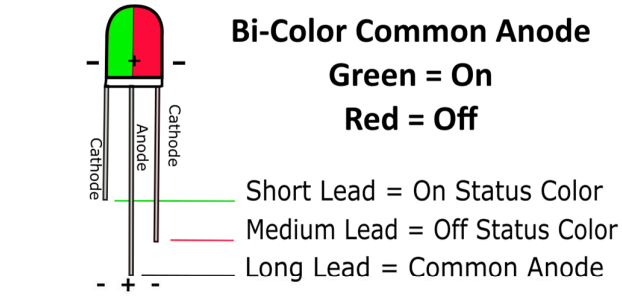

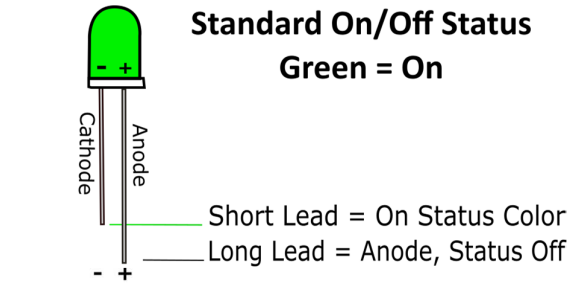

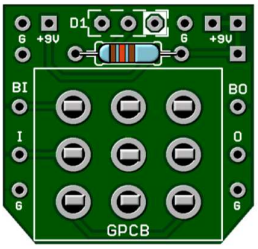

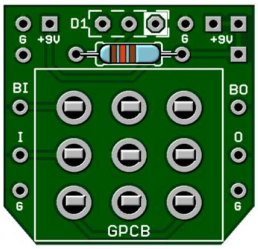

Note: If wiring the LED to our 3PDT board no need to connect S4, S5 & S6 or populate D2 or R8 (CLR) on the main board since you are wiring your LED directly to our board.

Direct Online Link: [3PDT Wiring Board Build Document]

Drill Template: Drill at your own risk. Print at 300 resolution.

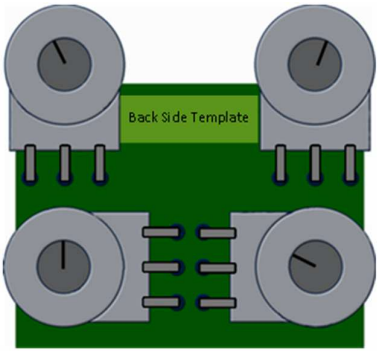

Cut out for drill template (Be sure to match with your board)

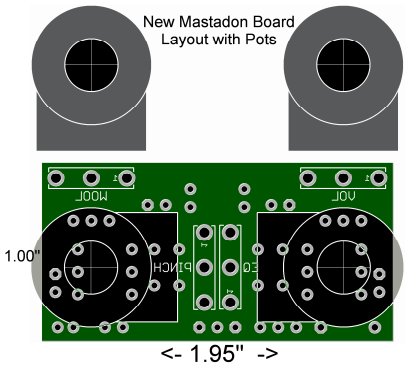

<- 1.95" ->

Drill Tips: Measure your components before selecting a drill bit. We recommend drilling the pot holes, mounting the pots in the enclosure, and then soldering the pots to the board. This approach should resolve the issue of the pots not fitting through the holes after soldering. We also recommend you make the holes for the pots a little larger than the threads in case you decide to remove the board and put it back in during the build, to avoid problems. Use this guide at your own risk. Make sure page scaling is turned off when you print this PDF, or the image above may be smaller than expected. Verify everything before drilling.

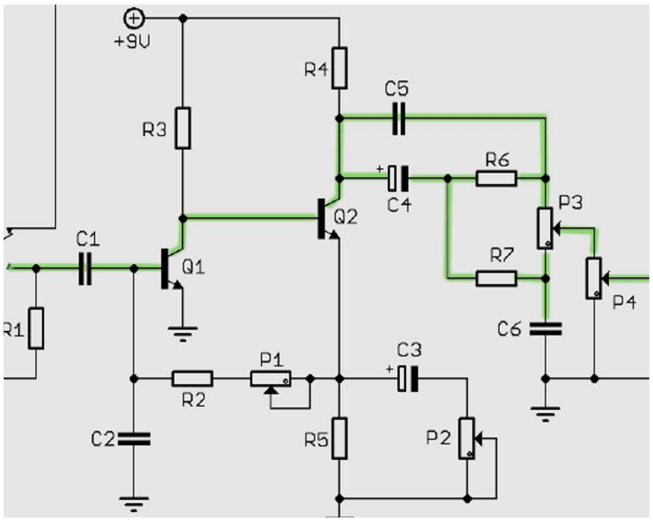

Audio Path and sample voltages for troubleshooting.

Q1 Emitter: 0V, Base 0,58V, Collector 1,2V

Q2 Emitter: 0,88V, Base 1,2V, Collector 2,3V

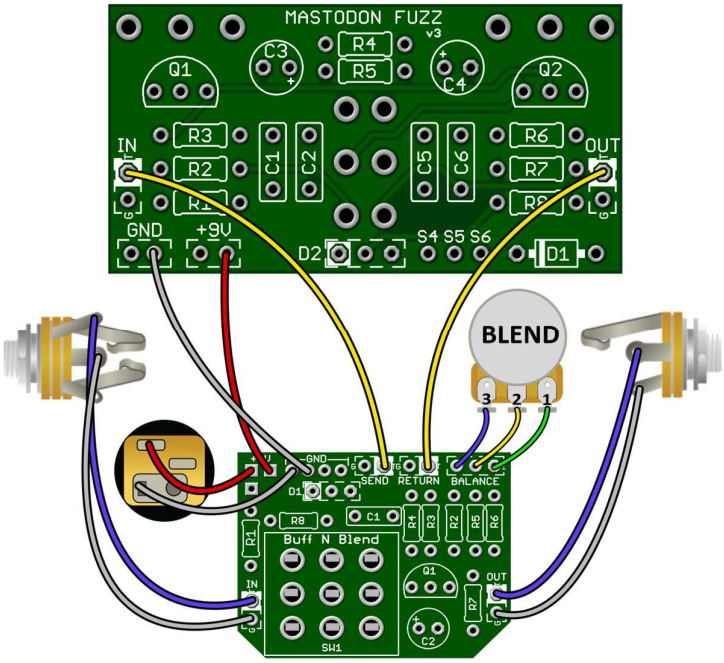

Diagram for adding a Buff N Blend to your build. See the Buff N Blend Build Document for details.

[Soldering Tutorial on Youtube]

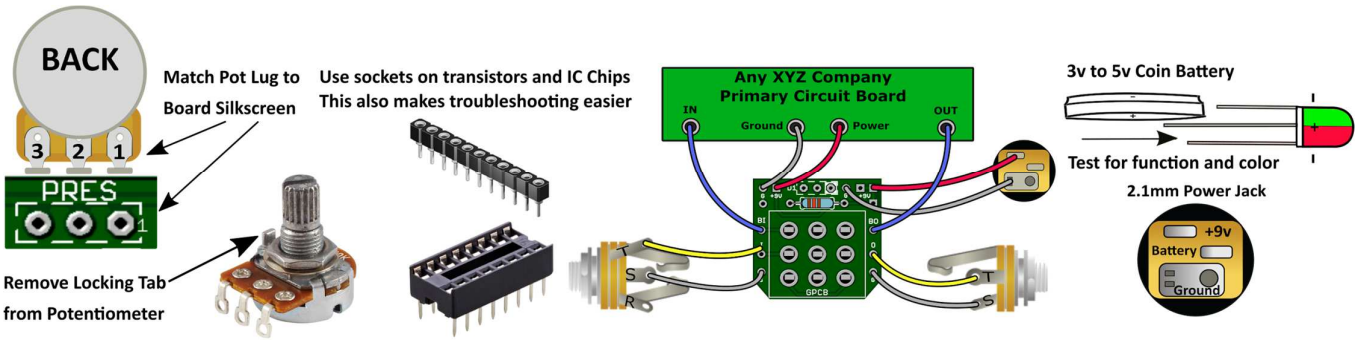

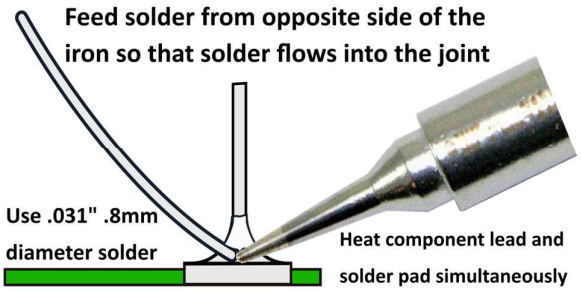

A good solder joint should be shiny and look like this:

*** Carefully re-flow suspect solder joints.**

*** Clean and tin your Tip regularly.**

When soldering wire to the board push the protective PVC jackect flush with the board and pad.

Use the right tools for the job and be patient.
If you need help ask questions first at the GuitarPCB forum.
We are there to help and we know our products best.

Need a kit? Check out our authorized worldwide distributors:

USA – Check out [PedalPartsAndKits] for all your GuitarPCB kit needs in the USA.

Europe – [Das Musikding] Order either boards or kits direct from Europe.

[PedalPartsAustralia] - Order either boards or kits direct from Australia

If they do not have a KIT listed send them a note asking if they can help you out.

This document, PCB Artwork and Schematic Artwork © GuitarPCB.com. Schematic, PCB and this document by Bruce R. and Barry. All copyrights, trademarks, and artworks remain the property of their owners.Distribution of this document is prohibited without written consent from GuitarPCB.com. GuitarPCB.com claims no rights or affiliation to those names or owners.