MKC3 - Modified Klon style Circuit

The best and most versatile Klon style PCB available.

The original Klon uses a "dual gang" Gain potentiometer, essentially two potentiometers with one controlling the "Dirt" side and the other controlling the "Clean" side simultaneously. The problem is there is no way to "Blend" in the amount of "Clean" signal you would actually like. With our MKC3 you can do this in one of two ways. (1). You can hookup two potentiometers side by side for individual operation. (2). Use a Trimmer for the "Clean" or Gain 2 and set it where you like it the best and leave it. With this method you can roll off all the "Clean" for a Dirty Klon or add Full "Clean" for a maximum Clean Klon you would never be able to achieve with a standard Klon circuit.

For even more versatility we also have included a Bass Boost option that adds in a Capacitor to allow more Bass frequency to pass through. Now you can go "stock" or use the switch for extra bottom anytime.

Finally, we have listed instructions for our "Ultra Gain Mod" which allows you to put two resistors at R15 on a DPDT switch for "Stock" or "Ultra Gain Mode". Other commercial Klon style pedals have also used this mod like the Ox.

You may always build the entire circuit "stock" but we think you will want to build a better Klon and make it yours!

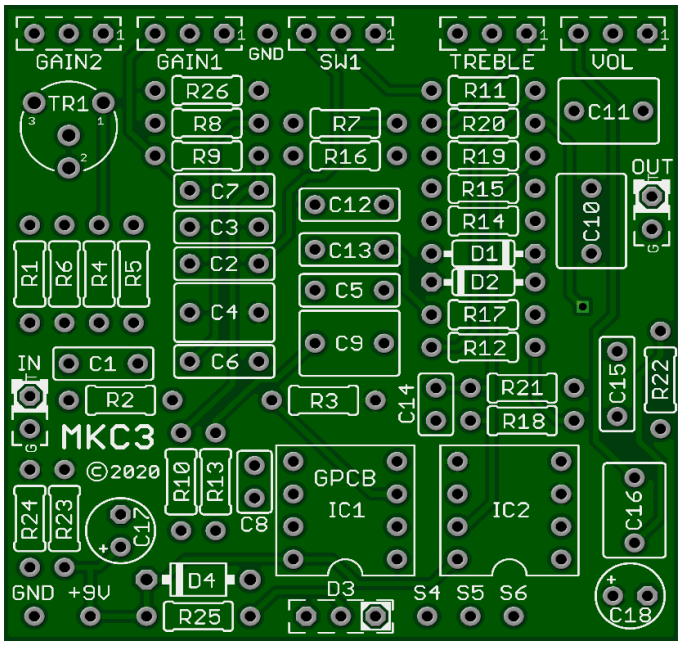

Size: 1.95" x 1.95"

R1	1M	R14	22k	C1	100n	C14	820p	SW1	SPDT
R2	10k	R15	47k*	C2	100n	C15	4n7		
R3	1M	R16	22k	C3	68n	C16	470n	TR1	100k
R4	4k7	R17	10k	C4	390n	C17	47µ		
R5	1k	R18	470k	C5	100n	C18	47µ	GAIN 1	100k Lin
R6	1k5	R19	2k2	C6	68n			GAIN-2	See Text
R7	10k	R20	4k7	C7	100n	D1	1N34A	TREBLE	10k Lin
R8	2k2	R21	100k	C8	390p	D2	1N34A	VOL	50k Log
R9	15k	R22	100k	C9	1µ				
R10	470k	R23	22k	C10	1µ	D3	CA Bi-color LED		
R11	1k5	R24	22k	C11	1µ	D4	1N4001		
R12	15k	R25	3k3	C12	2n2	IC1	TL072		
R13	1k	R26	68k*	C13	22n	IC2	TL072		

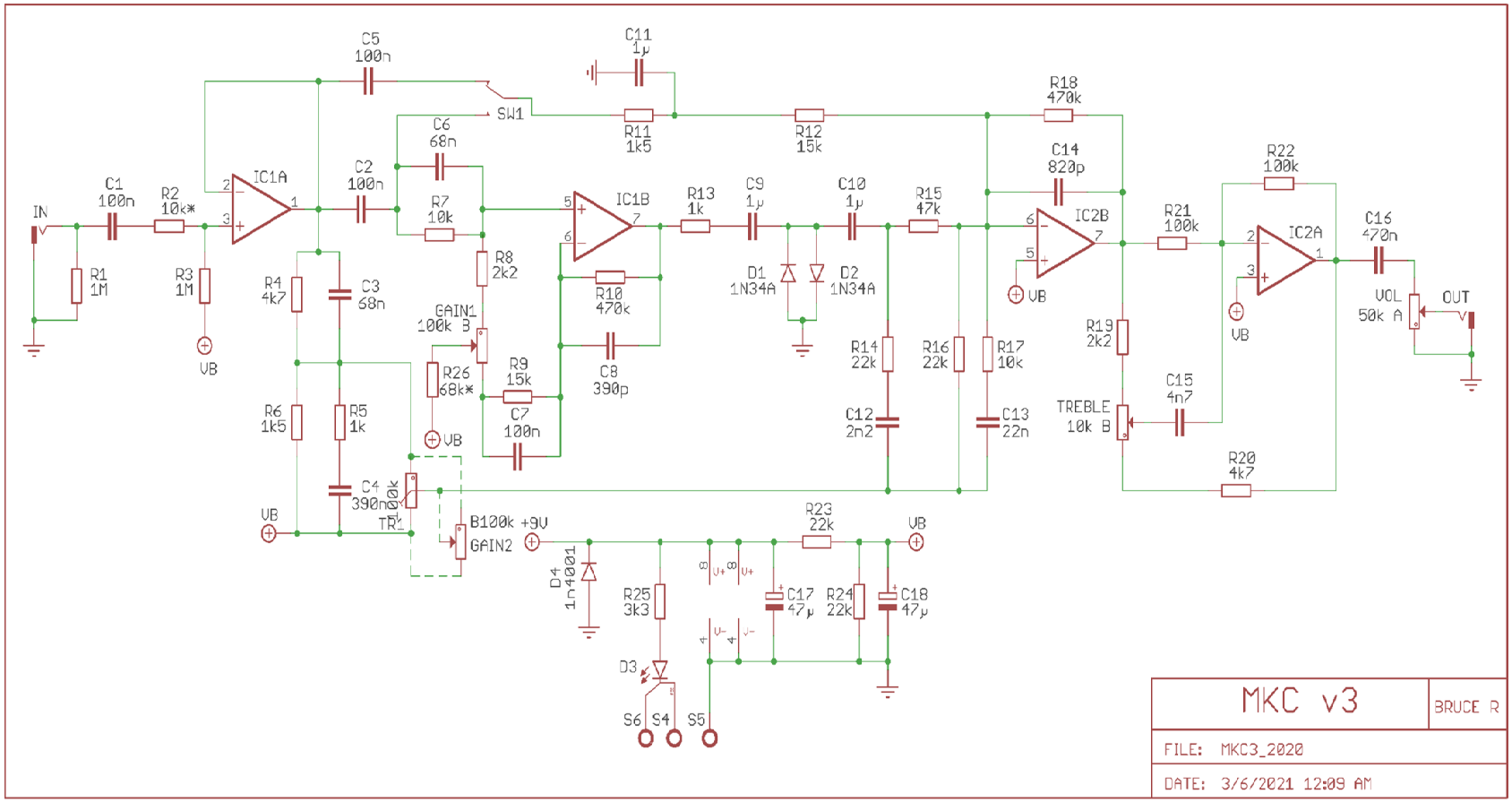
IN
R1 1M
C1 100n
R2 10k*
R3 1M
VB
IC1A
C5 100n
C2 100n
R4 4k7
C3 68n
R5 1k
R6 1k5
C4 390n
TR1 100k
C6 68n
R7 10k
R8 2k2
GAIN1 100k B
R26 68k*
R9 15k
C7 100n
IC1B
R10 470k
C8 390p
SW1
C11 1µ
R11 1k5
R12 15k
R13 1k
C9 1µ
D1 1N34A
D2 1N34A
C10 1µ
R15 47k
R14 22k
C12 2n2
R16 22k
R17 10k
C13 22n
R18 470k
C14 820p
IC2B
R19 2k2
TREBLE 10k B
C15 4n7
R20 4k7
R21 100k
R22 100k
IC2A
C16 470n
VOL 50k A
OUT
B100k +9V
GAIN2
D4 1n4001
R23 22k
R25 3k3
D3
S6
S4
S5
C17 47µ
R24 22k
C18 47µ
MKC v3
BRUCE R
FILE: MKC3_2020
DATE: 3/6/2021 12:09 AM

Modification Options

The following mods can be made to the circuit board:

The original circuit calls for a 100kΩ Lin stereo pot (dual gang) for the GAIN and GAIN-2 pot. This is a stereo pot takes up additional space and restricts circuit versatility by forcing you to use both controls simultaneously. This means there is no way to "Blend".

STOCK: Using a stereo (dual gang) pot, do not install the trim pot (TR1) and wire the GAIN 1&2 pads to a solder lug dual gang pot.

Gain Pot Mod #1: Use two 100kΩ Lin mono pots, one for GAIN 1 and the other for GAIN-2 (clean), in this case do not install TR1.

Gain Pot Mod #2: As neither of the above options are satisfactory in terms of enclosure space, we have included the option of changing the GAIN-2 (clean) pot to a trim pot (TR1). **Gain 2** control with the trimmer option is a clean blend-able option now. With this method you can roll off all the **"Clean"** for a **Dirty Klon** or add **"Full Clean"** for a maximum **Clean Klon** that either way you would never be able to achieve these tones with a standard Klon circuit.

***R26** compensates for those who have high output pickups and plan to turn all knobs up to "11". This will prevent any squeal which may result from doing so. Anything close to 68k is fine.

Bass Boost Mod: This adds a switch SW1 which adds a capacitor **C5** to allow more Bass frequency through. If you do not wish to include the **Bass Boost** switch (**SW1**) do not install **C5** and put a jumper between pads 2 & 3 of SW1.

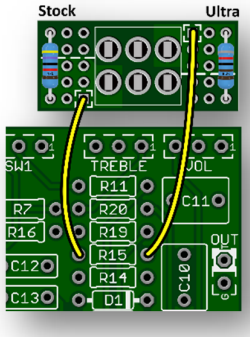

***Ultra-Drive Mod – This Mod is not Standard for Kits!**

This is an excellent Mod and is highly recommended. Consider putting this on a DPDT Foot switch for even more flexibility than a toggle switch.

The original circuit is most well known as a Clean to Mild Gain Boost to give an already driven amp that something extra! This mod will add an additional switch to your pedal to give you that extra shot of Drive. One of my **DPDT Wiring Boards** is handy.

You can use it with a **DPDT On/On** switch and choose between stock (***R15 47k**) and Ultra Drive Mode which is anything between 4.7k to10k. I like 8.2k in mine. The lower the value the HOTTER.

If you use my **DPDT wiring board** you can easily socket the Mod side and choose your value.

STATUS LED

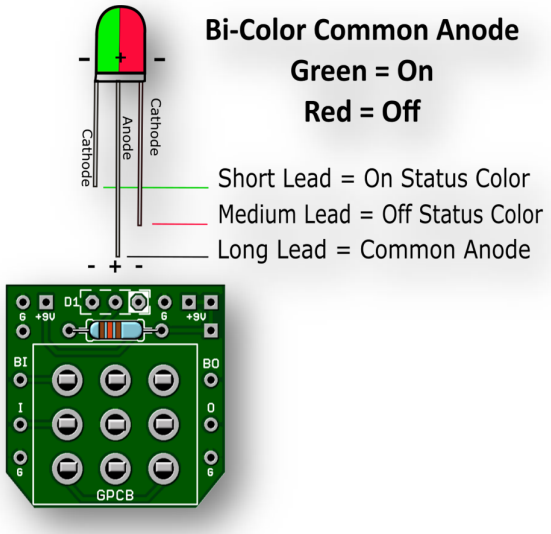

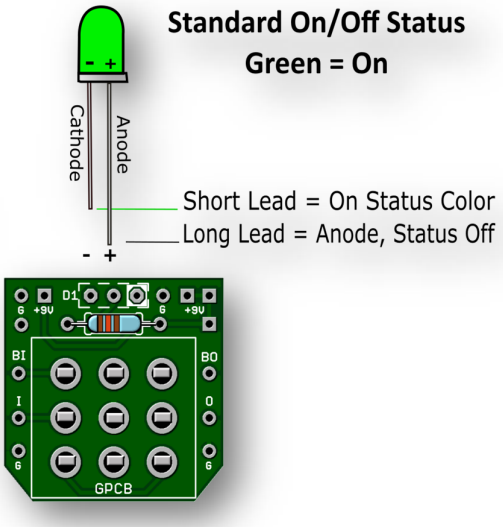

Note: If wiring the LED to our 3PDT board no need to connect S4, S5 & S6 or populate D3 or R25 (CLR) on the main board since you are wiring your LED and CLR directly to our 3PDT wiring board.

Current v3 Wiring Diagram

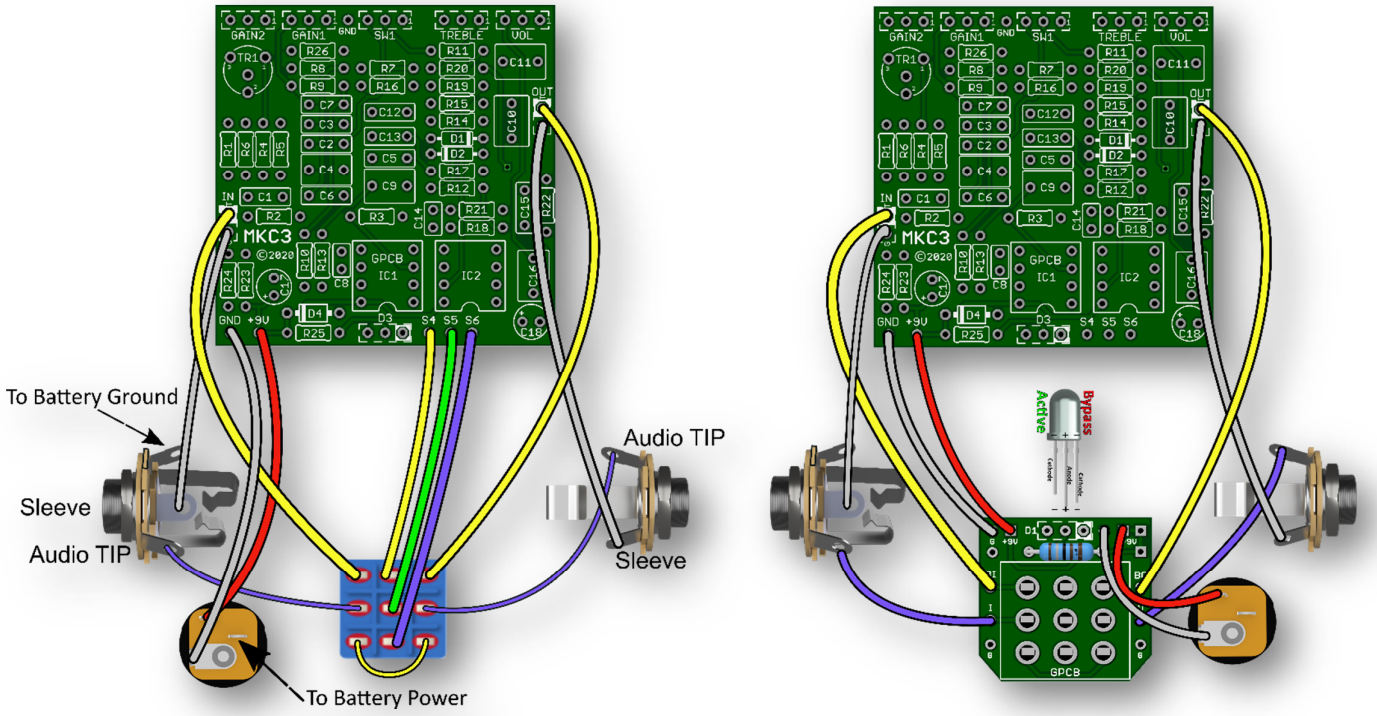

Old v2 (pre – 2018) Wiring Diagram

This diagram is from an earlier version of the board. A few connections have been moved but wiring remains the same.

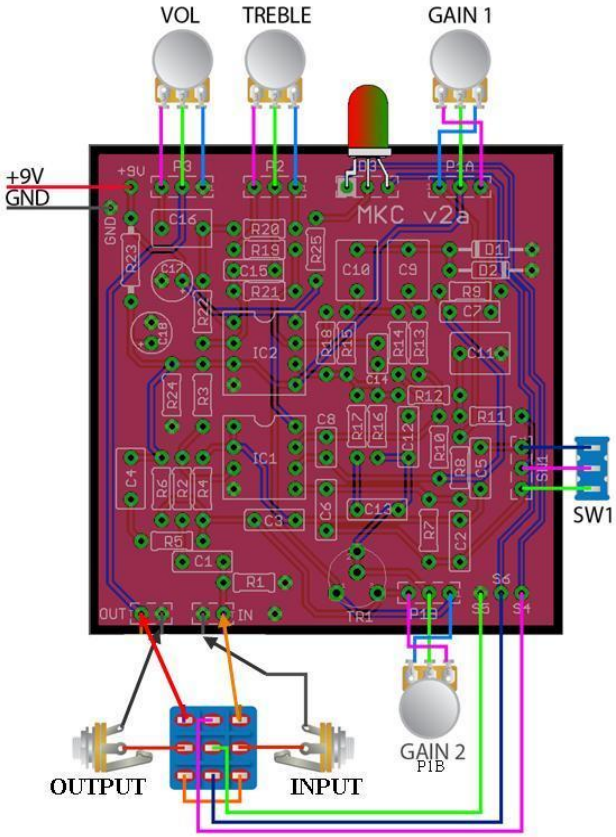

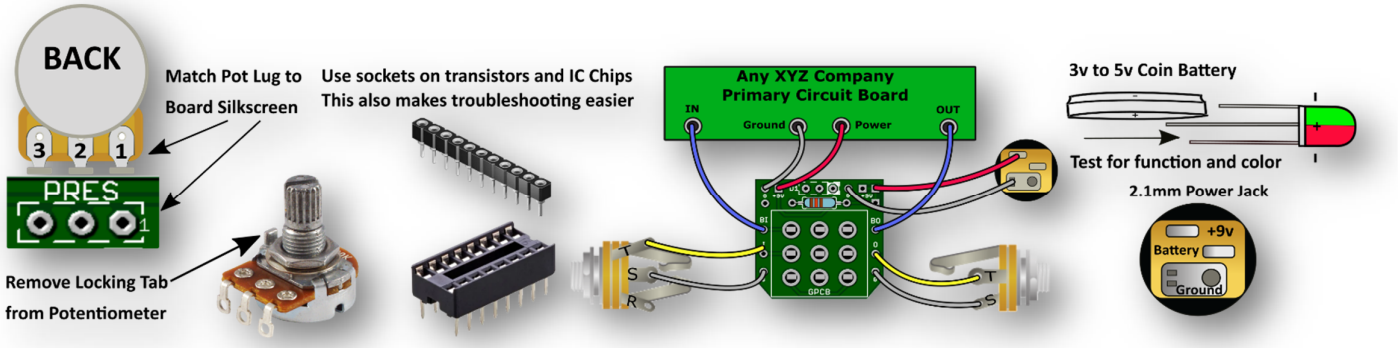

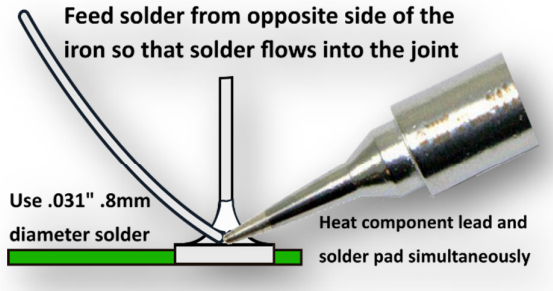

A good solder joint should be shiny and look like this:

* Carefully re-flow suspect solder joints.
* Clean and tin your Tip regularly.

When soldering wire to the board push the protective PVC jackect flush with the board and pad.

Use the right tools for the job and be patient.
If you need help ask questions first at the GuitarPCB forum.
We are there to help and we know our products best.

For purposes of troubleshooting, we have included a sheet with proper voltages.

Source: 9.11v ___.____

IC2

1 – 4.56	__.___	8 – 9.11 __.___
2 – 4.56	__.___	7 – 4.57 __.___
3 – 4.56	__.___	6 – 4.57 __.___
4 – 0.00	__.___	5 – 4.64 __.___

IC1

1 – 4.57	__.___	8 – 9.11 __.___
2 – 4.57	__.___	7 – 4.71 __.___
3 – 3.57	__.___	6 – 4.57 __.___
4 – 0.00	__.___	5 – 4.55 __.___

Need a kit? Check out our authorized worldwide distributors:

USA – Check out PedalPartsAndKits for all your GuitarPCB kit needs in the USA.

Europe – Das Musikding Order either boards or kits direct from Europe.

PedalPartsAustralia - Order either boards or kits direct from Australia

If they do not have a KIT listed send them a note asking if they can help you out.

This document, PCB Artwork and Schematic Artwork © GuitarPCB.com. Schematic, PCB and this document by Bruce R. and Barry. All copyrights, trademarks, and artworks remain the property of their owners. Distribution of this document is prohibited without written consent from GuitarPCB.com. GuitarPCB.com claims no rights or affiliation to those names or owners.