Industrial Fuzz

This is a wild and flexible fuzz circuit board from GuitarPCB.com. It can produce classic fuzz face tones, self-oscillating sounds, octave fuzz, and a variety of normal and weird sounds using 5 knobs. This new layout is designed to be flexible to fit into a 1590B/1290NS horizontally, or in a 125B enclosure horizontally or vertically.

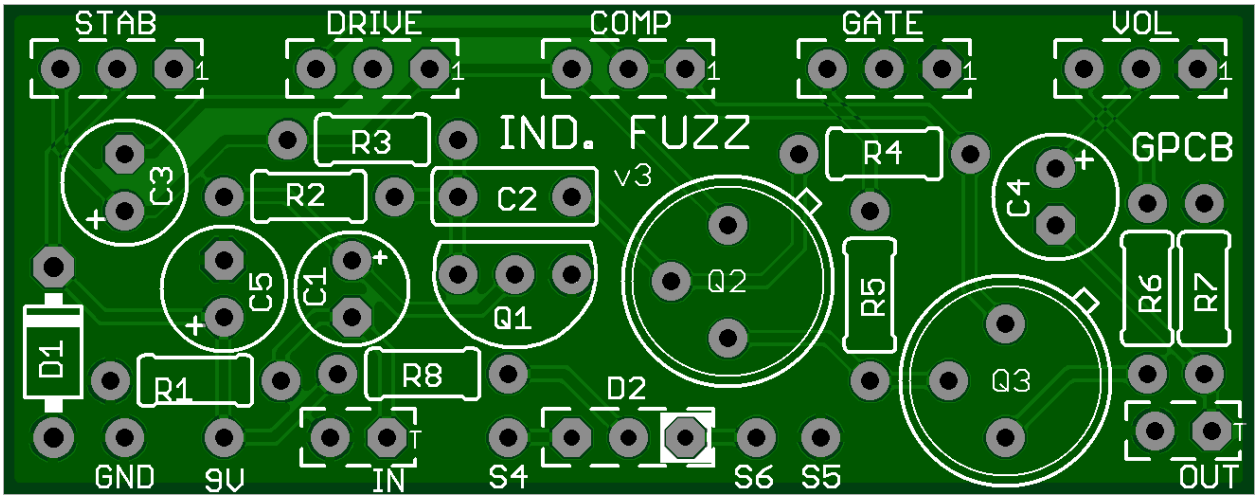

Board size: 2.2 by .86 inches or 56 by 22 millimeters.

Part	Value
D1	1n4001
D2	Bi-Color CA LED
R1	1M
R2	220K
R3	10K
R4	47K
R5	470R
R6	5K1
R7	220K
C1	10u
C2	100n

Part	Value
C3	10u
C4	10u
C5	47u
COMP	B10K
DRIVE	B10K
GATE	B10K
STAB	B5K
VOL	B5K
Q1	2N3904
Q2	PNP
Q3	PNP

Notes about this build:

- PNP Transistors can be 70 to 125 hFE. It is not mandatory to use Germanium transistors. Some builders prefer even higher-gain transistors, such as 150 – 225 hFE. Socket and see!
- The stab knob is a voltage sag, and for the most “normal” sounds should be cranked all the way up.
- The gate control is designed to make the notes cut off at certain levels to give the fuzz a certain effect, and is not intended as a traditional noise gate. Turn to the left to open the gate.
- On the board “In” and “Out” sections, the “T” pad will be the audio signal going to or from your 3PDT switch/board, which can be traced through the switch back to the “Tip” lug of the audio jack. The “S” pad is to be provided to be connected the “Sleeve” of the audio jacks.

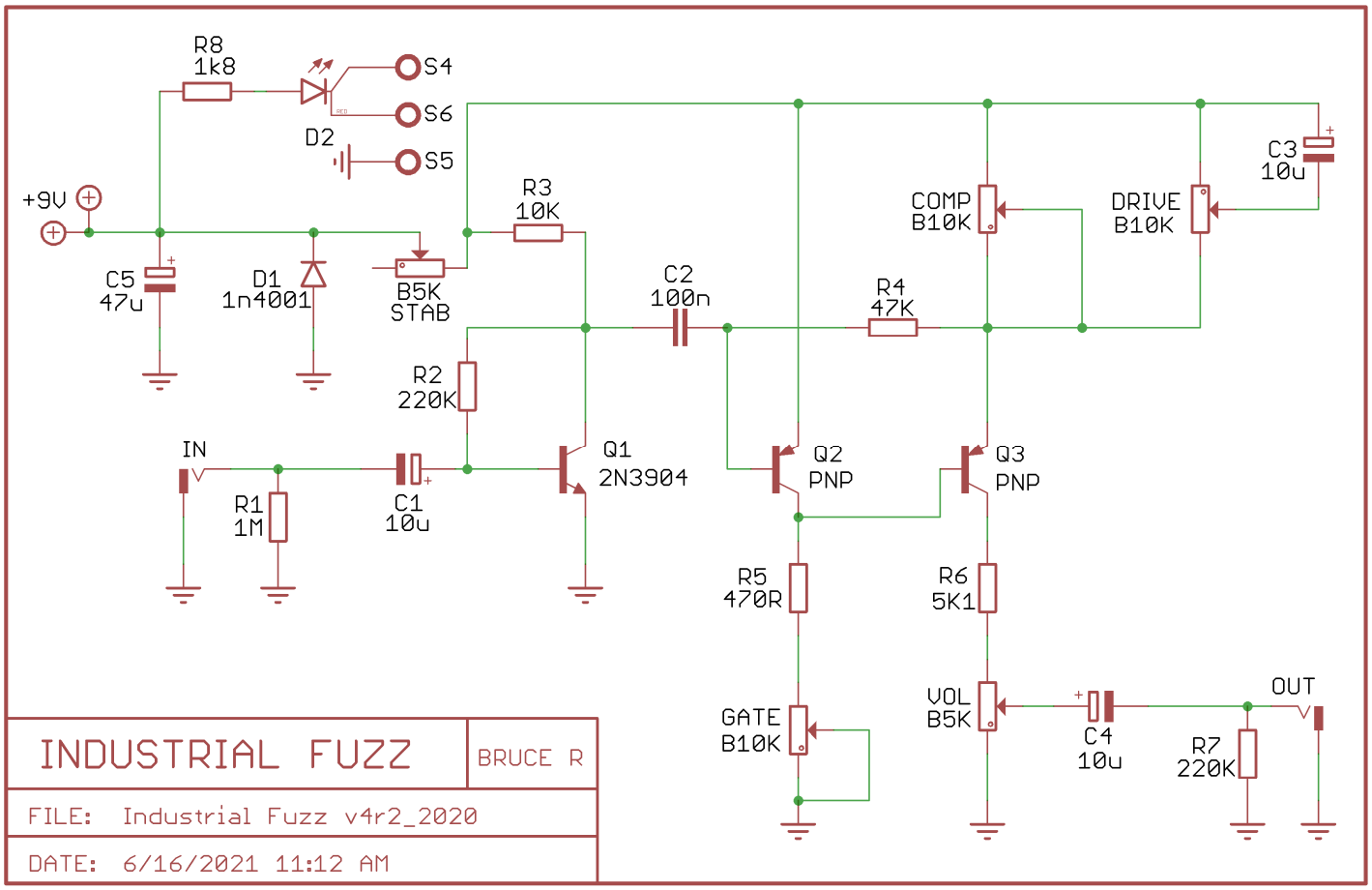

Using this fuzz:

- Most useful settings will have the voltage sag (STAB) control turned up all the way.
- A fuzz face-like setting can be obtained by turning Gate and Comp all the way down, Stab all the way up, and drive to about 2 o'clock.
- A high octave effect can be obtained by turning Drive and Comp all the way down, Stab all the way up, and the Gate to about 3 o'clock. Tweak the gate a bit to dial the octave effect in.
- For a high gain setting, turn gate to about 10 o'clock, comp to about 3 o'clock, and drive and stab all the way up.
- You can get some very strange sounds by playing with the Stab control in conjunction with the Comp, Dist, and Drive knobs.
- There are settings that make the pedal generate squeal noises all by itself, particularly when turning the stability (stab) knob below 2 o'clock. This is normal for this circuit and does not indicate a defect.
- Because some settings are not desirable, it is advised that you write down your favorite settings.
- **R8 is the CLR** for the Status LED (see more in the notes below) this is optional depending on build style.

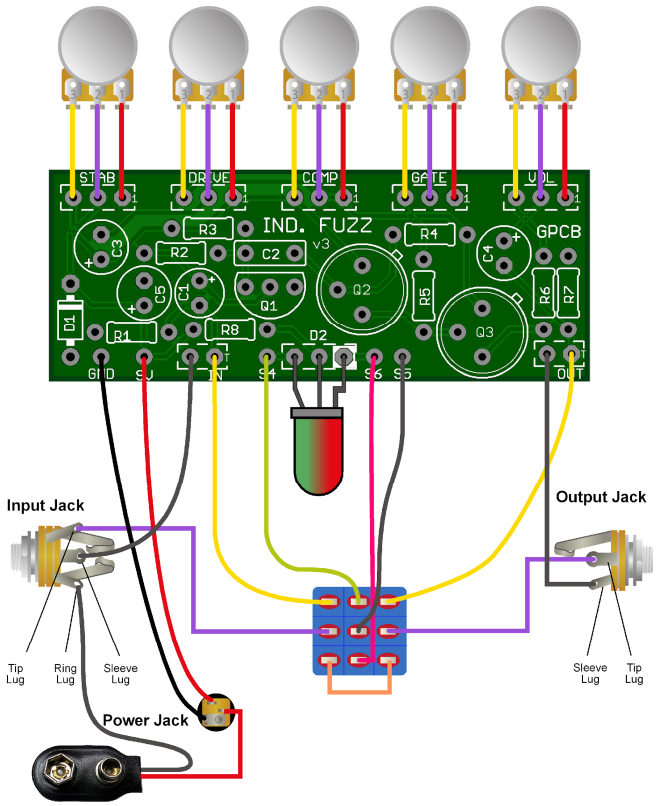

STATUS LED

D3 is a common anode bi-color LED. The diagram at right shows the pin-out, schematic symbol and pad connection for a common anode LED. The pin-out for the bi-color LED is typically (but not always) as follows:

1st Color Cathode	Is on the "flat" side of the LED (see graphic); 90 degree bend in the lead
Common Anode	Middle lead
2nd Color Cathode	45 degree bend in the lead

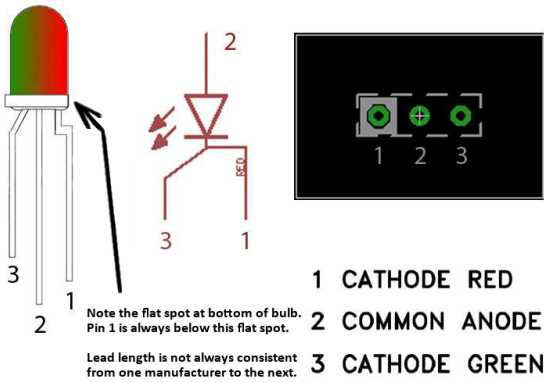

The lead 1 pad on the circuit board is marked with a white box. When connected correctly, the LED will light red when power is applied and the circuit is in bypass mode. The LED will light green when in effects mode. If you wish to use a standard LED, connect the anode to the middle pad and the cathode to the right pad to show the circuit in effects mode. If you use a 3PDT wiring board that includes an LED, you can omit this LED and R13. *R13 is the LED's Current Limiting Resistor (CLR). If you use a different LED, you may want to change this value to adjust LED brightness.

If you are using one of GuitarPCB's handy [3PDT wiring boards](), pads S4, S5, S6 and D2 would be ignored and R13 would not be installed. See wiring guide below for reference

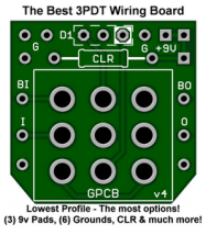

Other important notes:

- Socket your Transistors – You may wish to change them later and makes troubleshooting a lot easier.
- Share your finished pedal in the "Show off your Finished Pedal" section of the forum.
- R12 is the current limiting resistor. Brightness is a preference. 1k8 will yield a very bright LED and the higher the resistance the dimmer the light. 3k or even 4.7k has been used. This is your choice.
- A YouTube Demo is available.

IC's and transistors are easily damaged by heat from soldering and should never be directly soldered to the PCB.

For transistors, diodes, and LED's, use SIP (Single inline package) sockets. You simply cut the number of sockets required with an Exacto / Stanley knife or by gripping and rocking with pliers. This allows for easy changes and troubleshooting.

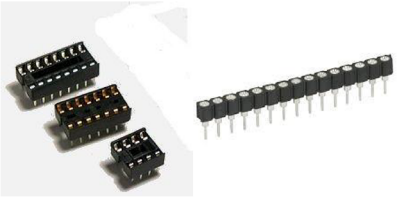

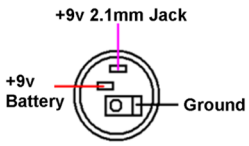

See our Guides Page on our Forum for help beyond the Basic Build Document

This document, PCB Artwork and Schematic Artwork © GuitarPCB.com. Schematic, PCB and this document by Bruce R. All copyrights, trademarks, and artworks remain the property of their owners.Distribution of this document is prohibited without written consent from GuitarPCB.com. GuitarPCB.com claims no rights or affiliation to those names or owners.