GuitarPCB.com

Guitar/Bass Driver v2

The Guitar/Bass Driver is based on original "Tonmann Layout" revised by Bruce R. This circuit contains (9) transistors to deliver a larger than life tube-like tone found in old Ampeg™ style amps. **Use only genuine 2N5457 and a J113 for the obsolete MPF102.**

The Guitar/Bass Driver contains (9) transistors to deliver a larger than life tube-like tone found in old Ampeg™ style amps. This circuit will make your Bass come alive and growl, but it also sounds amazing for your 6-String Guitar. It will deliver a natural sounding tube style breakup as you turn the gain up full. If you enjoy turning your gain to 10, finding a sweet spot position is easy using the volume and boost controls at 70-80% rotation, which will yield maximum drive with plenty of headroom.

Five Controls – Gain, Bass, Treble, Volume & Boost

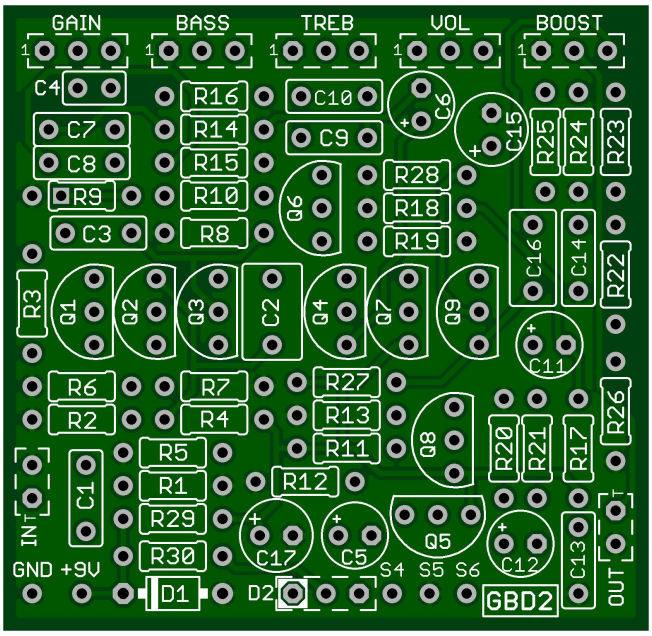

PARTS LIST

Part	Value	Part	Value	Part	Value	Part	Value
R1	2M	R16	200k	C1	100n	C16	100n*
R2	1M	R17	1M	C2	470n	C17	100µ
R3	47k	R18	1M	C3	100n		
R4	1M	R19	10k	C4	47p	D1	1n4001
R5	1M	R20	4k7	C5	1µ	D2	CA Bi-Color LED
R6	22k	R21	10k	C6	4µ7		
R7	200k	R22	10k	C7	1n	Q1-Q8	2N5457
R8	4k7	R23	100k	C8	4n7	Q9	MPF102
R9	22k*	R24	100k	C9	1n		
R10	100k	R25	33k	C10	10n		
R11	1M	R26	1M	C11	4µ7	BASS	A1M
R12	1M	R27	2k4	C12	4µ7	BOOST	A100k
R13	2k	R28	1k	C13	2n2	GAIN	A1M
R14	100k	R29	47R	C14	2n2	TREB	A1M
R15	4k7	R30	1k8	C15	22µ	VOL	B100k

Build Note: Use only genuine 2N5457's and a J113 for the now obsolete MPF102. Avoid eBay counterfeits.

SCHEMATIC

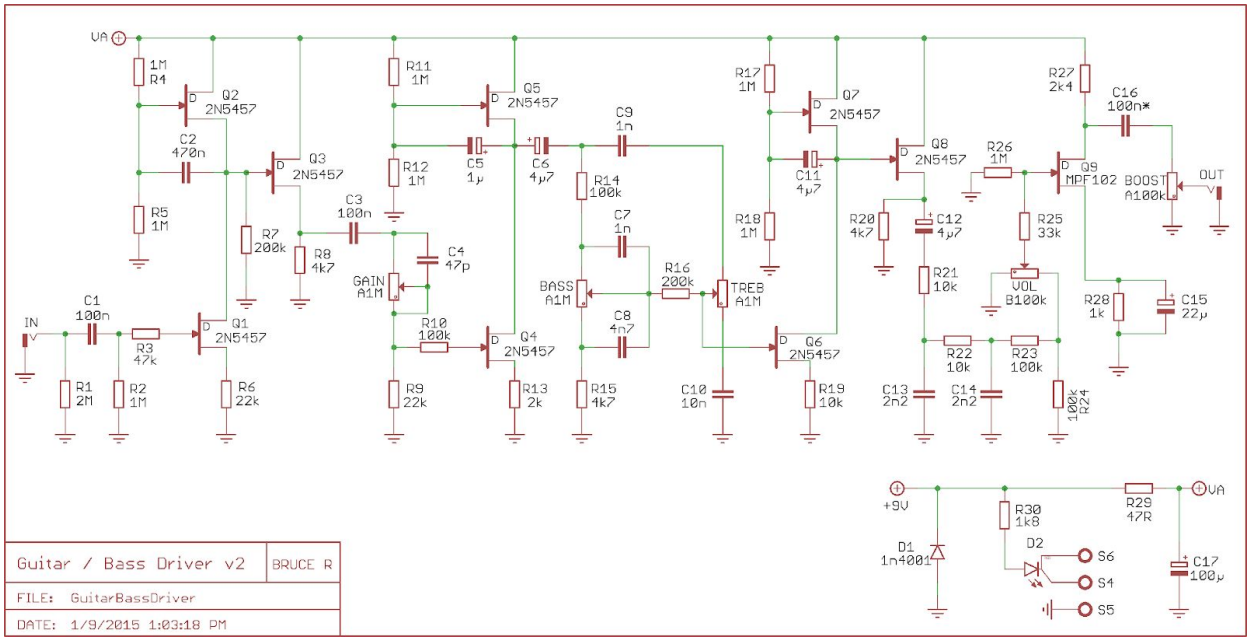

STATUS LED

D3 is a common anode bi-color LED. The diagram at right shows the pin-out, schematic symbol and pad connection for a common anode LED. The pin-out for the bi-color LED is typically (but not always) as follows: The lead 1 pad on the circuit board is marked with a white box.

When connected correctly, the LED will light red when power is applied and the circuit is in bypass mode. The LED will light green when in effects mode. **If you wish to use a standard LED, connect the anode to the middle pad and the cathode to the right pad to show the circuit in effects mode.** If you use a 3PDT wiring board that includes an LED, you can omit this LED and R30. *R30 is the LED's Current Limiting Resistor.

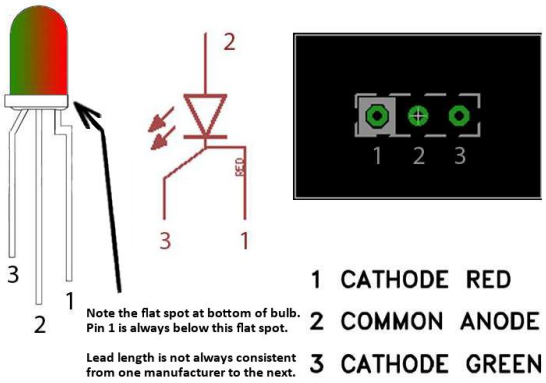

IMPORTANT NOTES

There are many components to this build. Please take your time and check every Resistor and Capacitor!

- Socket your Transistors **–** You may wish to change them later and makes troubleshooting a lot easier.
- R30 is a current limiting resistor. 1k8 will yield a bright LED. 2k - 4.7k has been used. This is your choice.
- Because this build uses (9) transistors resist the urge to turn every potentiometer to 10. While this would not be practical, doing so will case the unit to squeal with every control turned up full. This is normal.
- Be patient and take your time with this one. Test & check each component and check off when soldered.
- This build has values of **47R** (Ohm), **4.7k** (4k7), and **47k** – Please be careful not to mix these up!
- *R9 may be Modded. It allows more or less Gain. Lower to 15k is less. Raise to 27k for more. Results vary.
- If this Circuit is going to be used exclusively for Bass then *C16 can be 100nF to 220nF or any in between.

IC's and transistors are easily damaged by heat from soldering and should never be directly soldered to the PCB.

GuitarPCB does carry MPF102's and 2N5457's and other accessories for your convenience.

For transistors, diodes, and LED's, use SIP (Single inline package) sockets. You simply cut the number of sockets required with an Exacto / Stanley knife or by gripping and rocking with pliers. This allows for easy changes and troubleshooting.

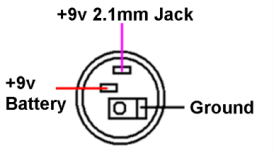

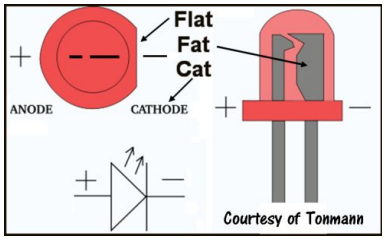

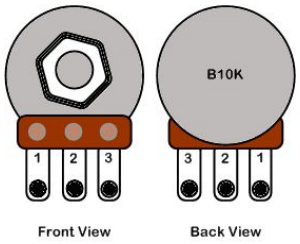

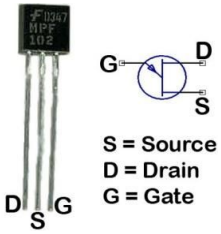

Wiring Diagram

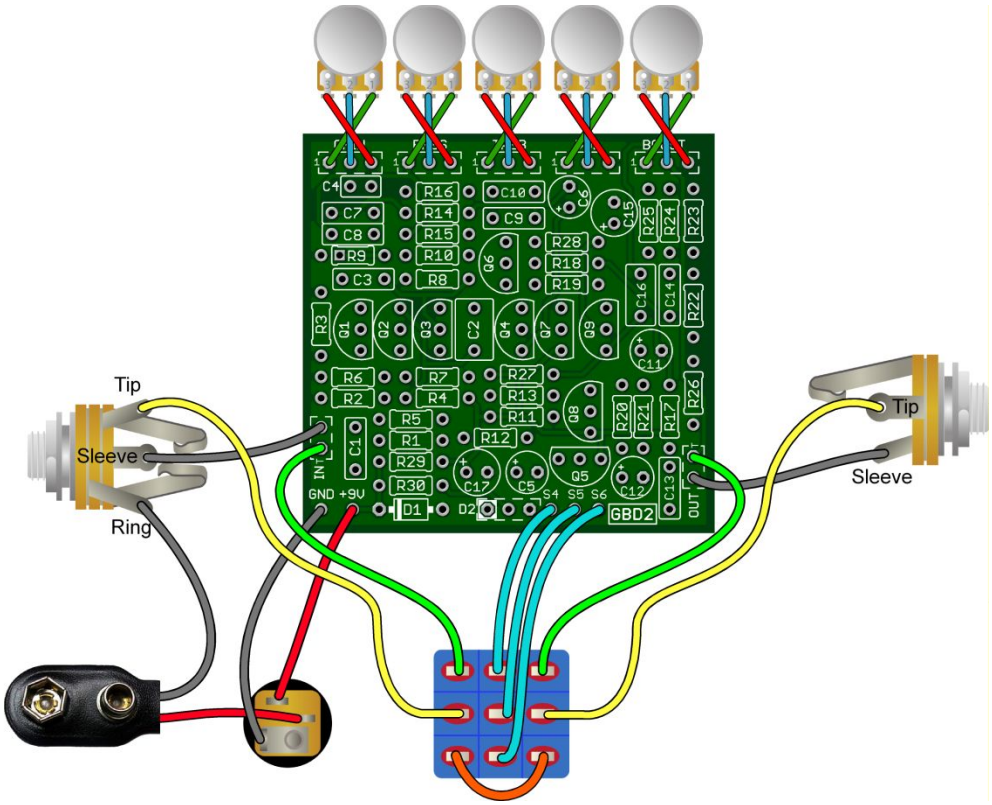

In the wiring diagram above, you notice that the sleeve of each jack is connected to a ground pad on the board next to the input pad or output pad. It does not matter to which ground pad each jack is connected, as long as the sleeve is connected to ground. The pad marked “T” is the input or output, and the adjacent pad is ground.

Soldering Tutorial on Youtube

Need a kit? Check out our authorized worldwide distributors:

USA – Check out PedalPartsAndKits for all your GuitarPCB kit needs in the USA.

Europe – Das Musikding Order either boards or kits direct from Europe.

PedalPartsAustralia - Order either boards or kits direct from Australia

If they do not have a KIT listed send them a note asking if they can help you out.

This document, PCB Artwork and Schematic Artwork © GuitarPCB.com. Schematic, PCB and this document by Bruce R. and Barry. All copyrights, trademarks, and artworks remain the property of their owners.Distribution of this document is prohibited without written consent from GuitarPCB.com. GuitarPCB.com claims no rights or affiliation to those names or owners.