GuitarPCB.com

EMEXAR 2 Build Instructions

Board Dimensions (W x H) 1.95 x 1.03 inches, i.e.: 49.5 x 26.2mm. This design will fit into a 1290NS/1590B size enclosure or larger. With this board, you can make several different projects. You can make a Dist+™, DOD250™ or Micro Amp™.

This board has PCB-mounted potentiometers. We recommend that you use the included drilling template to assure that your holes align with the components correctly. In addition to making a variety of projects with this board, there are also a number of modifications you can make if you wish which are described in this document. **Please read carefully before starting.**

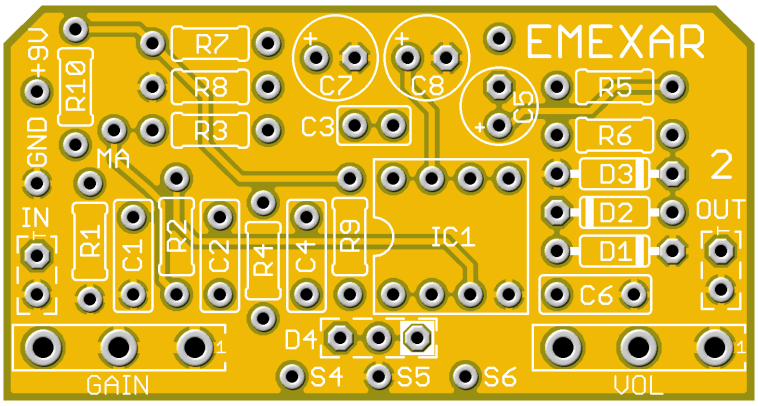

PARTS LISTS – The original IC was an LM741. You may also use the newer TL071 as well. Stock is listed 1st.

*See Text in Mods below

Dist +™	
Part	**Value**
R1	1M5 or 1M
R2	10k
R3	1M
R4	4k7
R5	1M
R6	10k
R7	1M
R8	1M
R9 (CLR)	1k8*
R10	jumper
D1	1N34A or Silicon
D2	1N34A or Silicon
D3	Jumper*
D4	Bi-color CA LED
C1	1n
C2	10n
C3	10p
C4	47n
C5	1u*
C6	1n
C7	1u

MicroAmp™	
Part	**Value**
R1	22M* or 10M
R2	1k
R3	10M*
R4	2k7
R5	56k
R6	470R
R7	100k
R8	100k
R9 (CLR)	1k8*
R10	1N4001*
D1	Nothing
D2	Nothing
D3	Nothing
D4	Bi-color CA LED
C1	Nothing
C2	100n
C3	47p
C4	*4u7 or 4.7uF
C5	15u
C6	Nothing
C7	1u

DOD 250™	
Part	**Value**
R1	2M2
R2	10k
R3	470k
R4	4k7
R5	1M
R6	10k
R7	22k
R8	22k
R9 (CLR)	1k8*
R10	100R
D1	1N4148
D2	1n4148
D3	Jumper*
D4	Bi-color CA LED
C1	Nothing
C2	10n
C3	25p
C4	47n
C5	4u7
C6	1n
C7	10u

C8	Nothing*
GAIN	C500k
VOL	A50k

C8	Nothing*
Level	C500k
VOL	10k fixed resistor*

C8	Nothing*
GAIN	C500k
VOL	A100k

SCHEMATIC

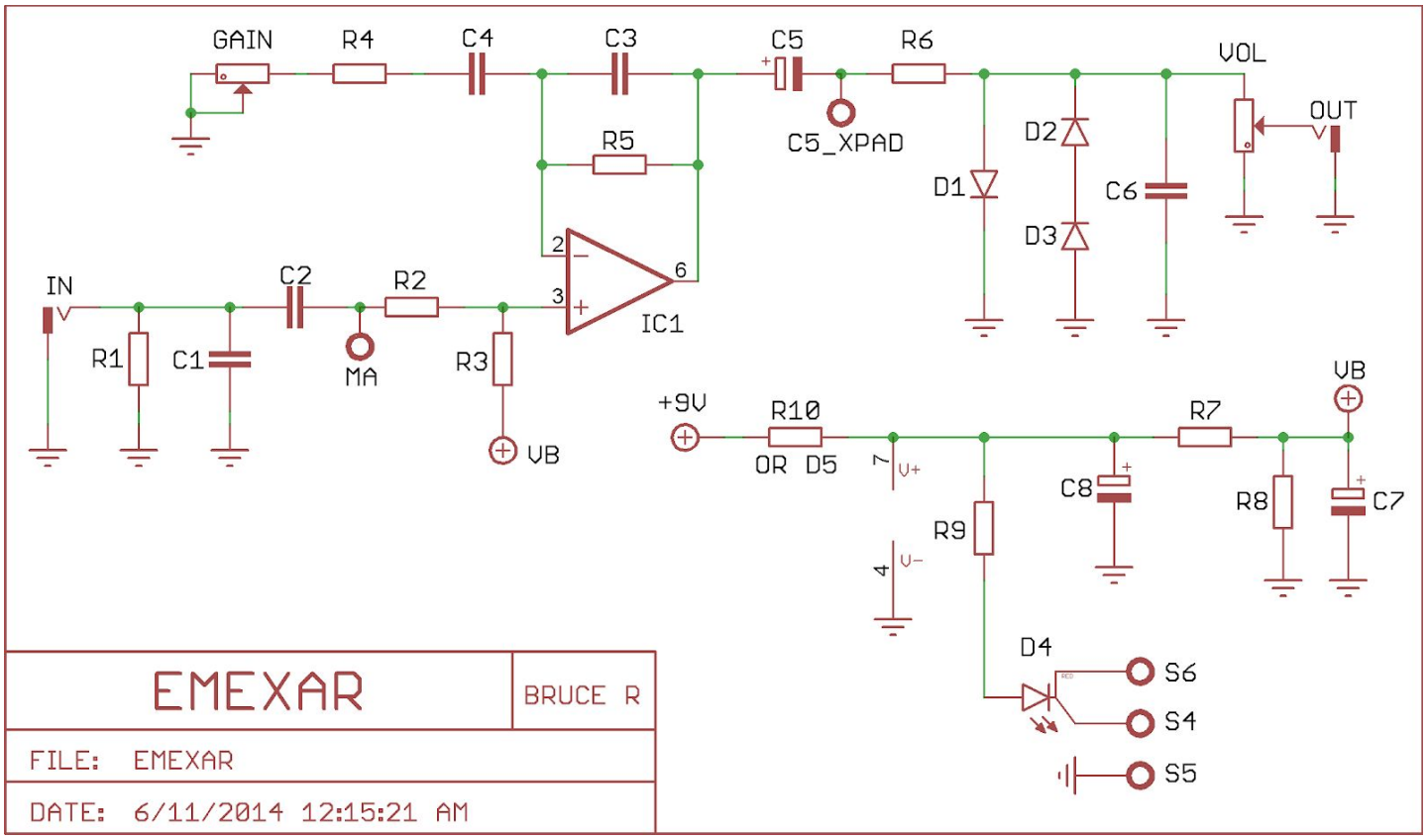

STATUS LED

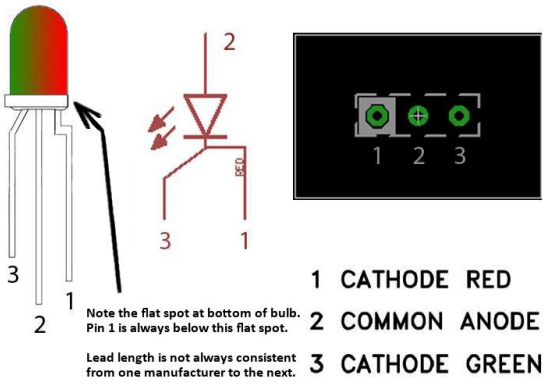

D4 is a common anode bi-color LED. The diagram at right shows the pin-out, schematic symbol and pad connection for a common anode LED. The pin-out for the bi-color LED is typically (but not always) as follows:

The lead 1 pad on the circuit board is marked with a white box.

When connected correctly, the LED will light red when power is applied and the circuit is in bypass mode. The LED will light green when in effects mode. **If you wish to use a standard LED, connect the anode to the middle pad and the cathode to the right (non-white) pad to show the circuit in effects mode.** If you use a 3PDT wiring board that includes an LED, you can omit this LED and R9. R9 is the LED's Current Limiting Resistor (CLR). If you use a different LED, you may want to change this value to adjust LED brightness. Most single-color LED's work well with a CLR between 2k4 – 4k7 and can be varied to adjust brightness to taste.

IMPORTANT NOTES and MODS

- Please note that for any modifications, the parts are not likely to be included in any kits available from authorized GuitarPCB.com distributors.
- If you are making a Distortion+™ work-alike, for component C5, you may use an electrolytic capacitor, or a poly film box capacitor using the bottom C5 pad, and the extra pad above C5.
- C8 was not in any of the original circuits, and only provides a 9V+ power buffer (so it won't change the sound of the circuit). If you wish to populate this, a 4u7 or 10u capacitor will work fine. Note that if you populated C5 with a large, square polyfilm capacitor, C8 would not be able to fit correctly due to size constraints.
- Any parts marked with a value of "Nothing" should be left empty. These spots were left for components in the other builds for this board. R10 is a resistor in the DOD 250™ build, but is a diode in the MicroAmp™ build.

- Under the “socket and see” approach try different clipping diode options such as Germanium, Silicon and Led. For example populating D1 and D2 with Germanium and Silicon in series will produce a unique tone with more available volume or gain. Try adding a Diode at D3 for Asymmetrical clipping. Again, socket and see. Adding an LED at D3 may produce a fat tone.
- Use a DPDT Switching Board to be able to switch between your favorite choices by connecting common leads to the pads for D1. Leaving D2 and D3 unpopulated. This will also make it easy to populate diodes in series, as well.
- Change out one capacitor and two (or three) diodes to open up the bass response a bit, and to smooth out the distortion. Use (2 or 3) 1n4148 diodes (substitute an LED in D3 for a bit more crunch)Change C4 to a 220nF, or put them on a DPDT Wiring board for a switchable effect and use a “Socket and See” Try 680n for Bass Mod.
- **For the MicroAmp**™, the resistor at R1 (the original value 22M) this is not a common value, a 10M which will be fine. Also when populating C4 you may use an Electrolytic, or Tantalum Capacitor. The North side, or Top Pad of C4 looking at the board would be the Positive leg. Note: If using a Tantalum for fit, you must orient it correctly, or risk damage!
- **The MicroAmp**™ only has a single Level control. If you wish to keep your build true to the original, we suggest using a wired solder lug potentiometer connected to the "Gain" pads so you can center the single knob on your enclosure. If you do this, you will need to solder a fixed 10k resistor between "Volume" pads 1 and 2, and a jumper between pads 2 and 3.
- Below, you will see a section from the schematic, as well as the same section below it, which is slightly modified. In the **MicroAmp**™, R3 connects from VB to the left side of R2, whereas in the other builds, it connects to the right side of R2. An additional pad named **MA** (see image below) has been added to the board to allow for R3 to be connected as in the original MicroAmp™ circuit. At the right of the schematic images, you will see part of the circuit board (some traces have been removed for clarity). All builds use the right pad of R3, and the left side of R3 will connect as shown in this image, depending on which project you are building.

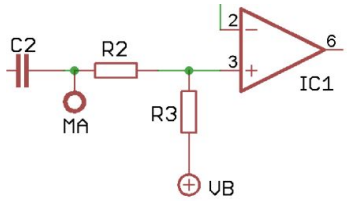

Dist+ and DOD250 Schematic

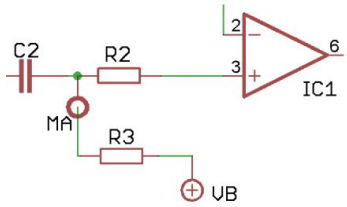

MicroAmp Schematic

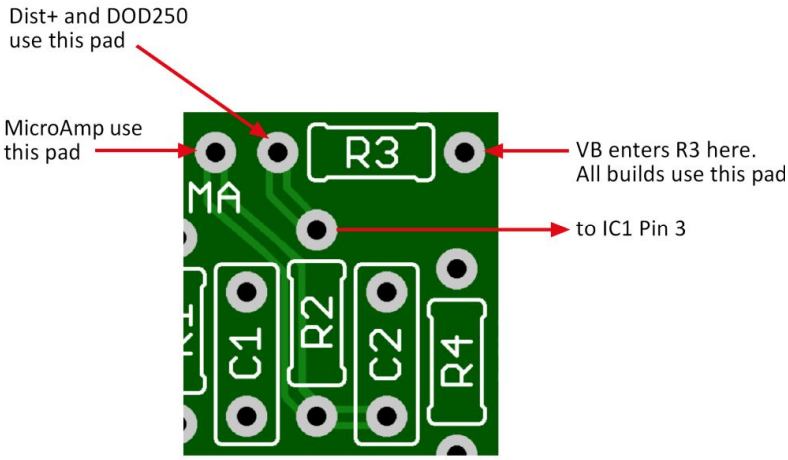

DRILLING GUIDANCE FOR POTS and LED

We suggest you print this and use as a template for drilling your enclosure. When printed, the green border of the board should measure 1.95 x 1.03 inches, i.e.: 49.5 x 26.2mm. Drill carefully and at your own risk. Mount pots in enclosure before soldering.

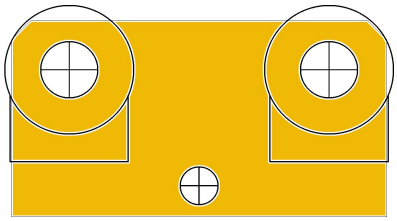

Note: Only Drill the LED hole displayed above if you plan to use the status LED on the EMEXAR circuit board!

Hole diameters are not exact in this image, so please measure your components before selecting a drill bit. We recommend drilling the pot holes, mounting the pots in the enclosure, and then soldering the pots to the board. This approach should resolve the issue of the pots not fitting through the holes after soldering. We also recommend you make the holes for the pots a little larger than the threads in case you decide to remove the board and put it back in during the build, to avoid problems. Use this guide at your own risk. Be sure to make sure page scaling is turned off when you print this PDF, or the image above may be smaller than expected.

WIRING DIAGRAM

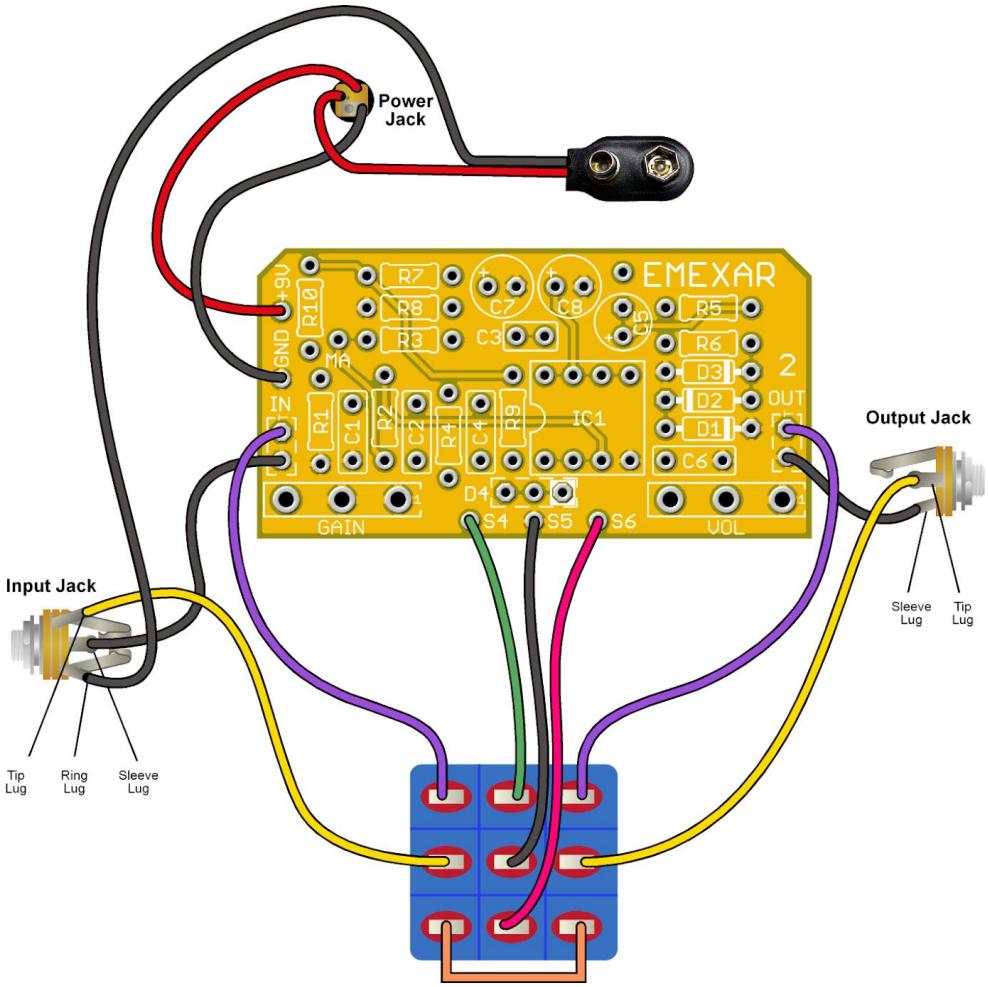

<u>Testimonial from Moderator Wilkie1 regarding the MicroAmp style build.</u>
The MicroAmp™ has tremendous gain! I put in a 500mv sine wave and the output went from unity gain up to almost 6V! The response was the same from 25 Hz to over 3KHz., NO DISTORTION observed anywhere. Totally clean. Sonically it was totally transparent on guitar. The o'scope looked just fine throughout the freq range of a bass or standard guitar.

Use our handy DPDT Wiring Board for multiple pro looking options!
Build one to simply use as a testing tool (socketed with SIL sockets) to decide what works best.

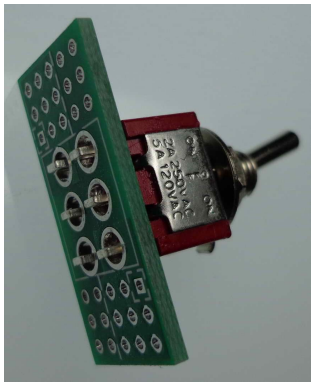

Here are a few Combo Wiring possibilities to consider:

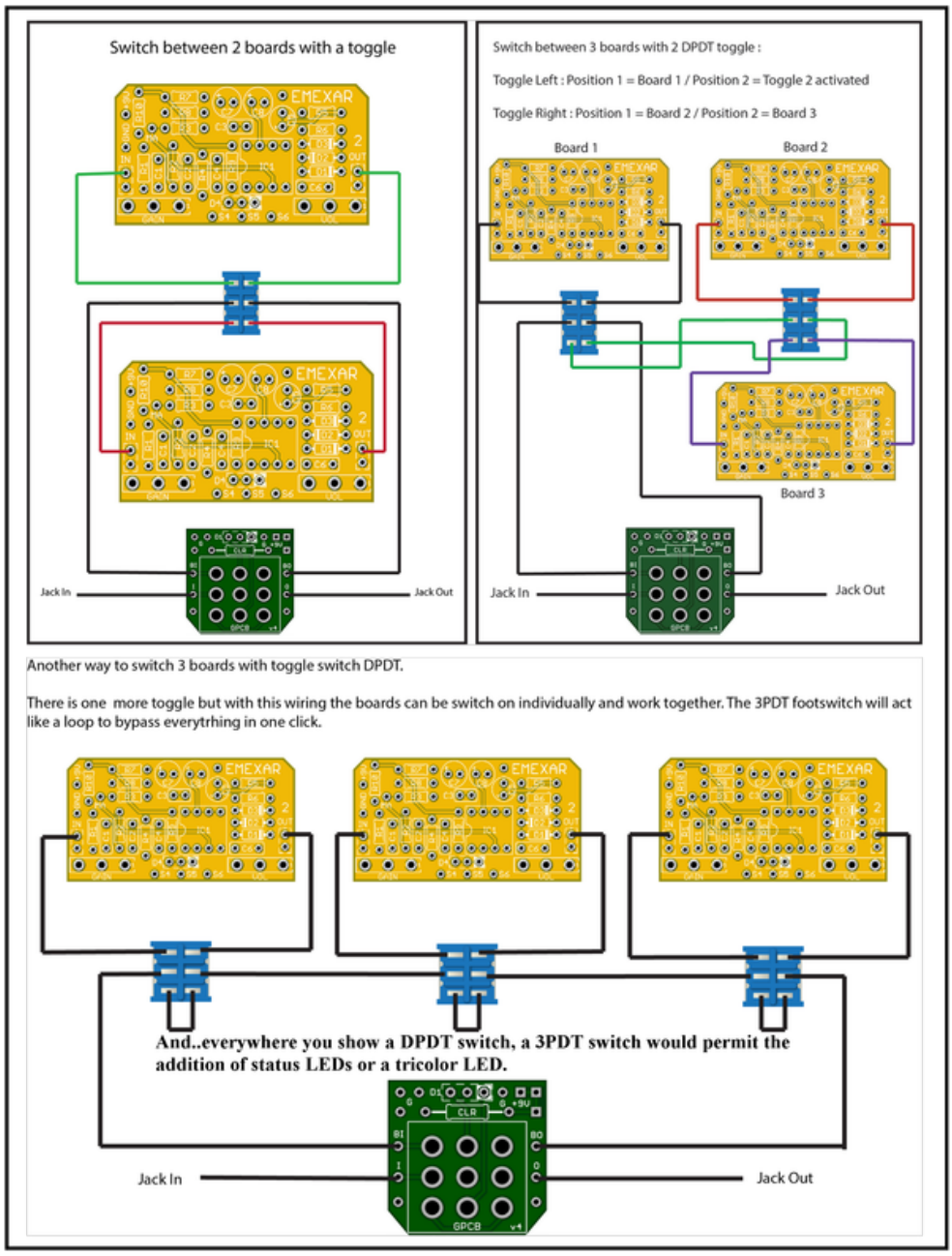

[Soldering Tutorial on Youtube]

Need a kit? Check out our authorized worldwide distributors:

USA – Check out [PedalPartsAndKits] for all your GuitarPCB kit needs in the USA.

Europe – Das Musikding Order either boards or kits direct from Europe.

PedalPartsAustralia - Order either boards or kits direct from Australia

If they do not have a KIT listed send them a note asking if they can help you out.

This document, PCB Artwork and Schematic Artwork © GuitarPCB.com. Schematic, PCB and this document by Bruce R. and Barry. All copyrights, trademarks, and artworks remain the property of their owners.Distribution of this document is prohibited without written consent from GuitarPCB.com. GuitarPCB.com claims no rights or affiliation to those names or owners.