Dr Phybes v2

Build an amazing Classic Phase 90, w/ 45/90 Mod, install in a standard pedal enclosure or install in a wah shell for rate shifting while playing. There is a large ground hole for mounting to a wah shell.

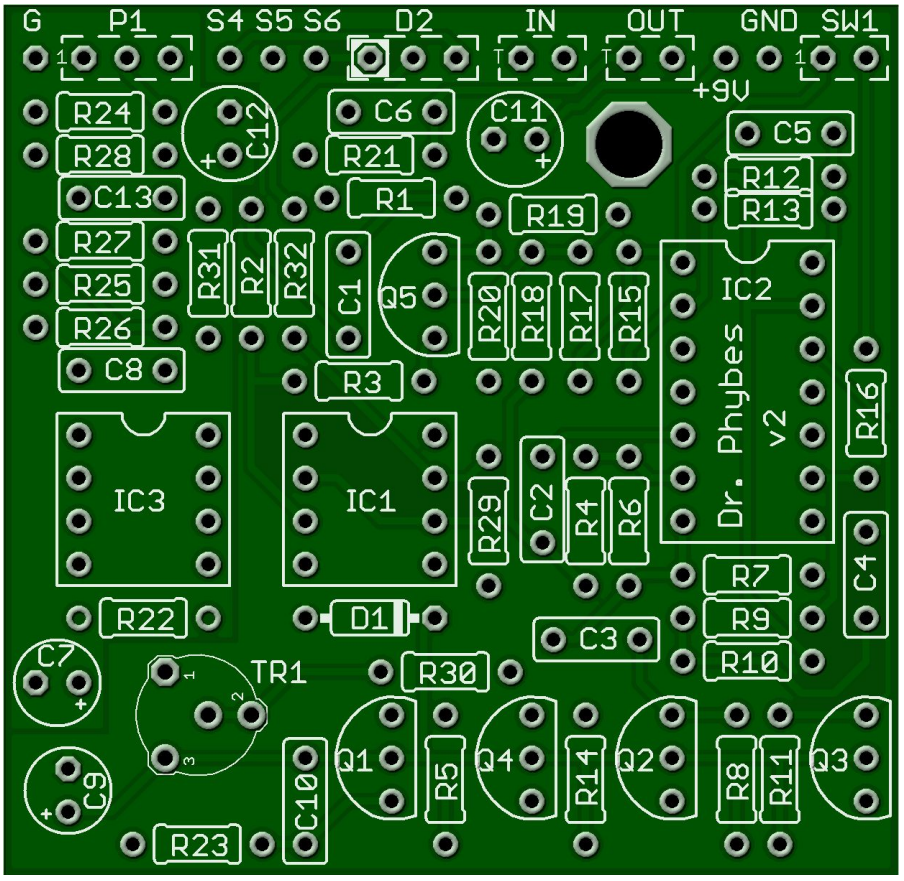

Board Dimensions (W x H) 2.08” x 2.03” ca. 52.7 mm x 51.44 mm
This is an Advanced Build with many uses and capabilities.Mods are not included with kits.
Not recommended for beginners. *Matched FETs are required for the project and for Support help.*

R1	1M	R17	150k	C1	10n	IC1	TL071	Mono Op Amp
R2	10k	R18	150k	C2	47n	IC2	TL074	Quad Op Amp
R3	470k	R19	150k	C3	47n	IC3	TL061	Low Current Mono Op Amp
R4	10k	R20	56k	C4	47n			
R5	22k	R21	150k	C5	47n	Q1 -Q4	2N5952	Matched
R6	10k	R22	150k	C6	47n	Q5	2N4125	General Purpose Silicon PNP
R7	10k	R23	3M9	C7	22µ			
R8	22k	R24	4k7	C8	10n	TR1	250k	Trim Pot
R9	10k	R25	470k	C9	10µ	SPEED	*500k	Reverse Log Pot
R10	10k	R26	150k	C10	47n	SW1	SPST	
R11	22k	R27	22k	C11	100µ			
R12	10k	R28	22k	C12	100µ	D1	5v1 Zener	
R13	10k	R29	10k	C13	10n	D2	CA Bi-colour LED	
R14	22k	R30	1M					
R15	10k	R31	100R	D1	5v1 Zener			
R16	33k	R32	3k3	D2	LED			

*** TR1** - Adjust TR1 trimmer till you hear the best phasing typically around 12:00

****500k vs. 100k Potentiometer:** 500k works fine however too many people do not hear the extremely slow side of the sweep (which means people do not find a use for the first 25% of the pot sweep) so a 100k gives more usable range.

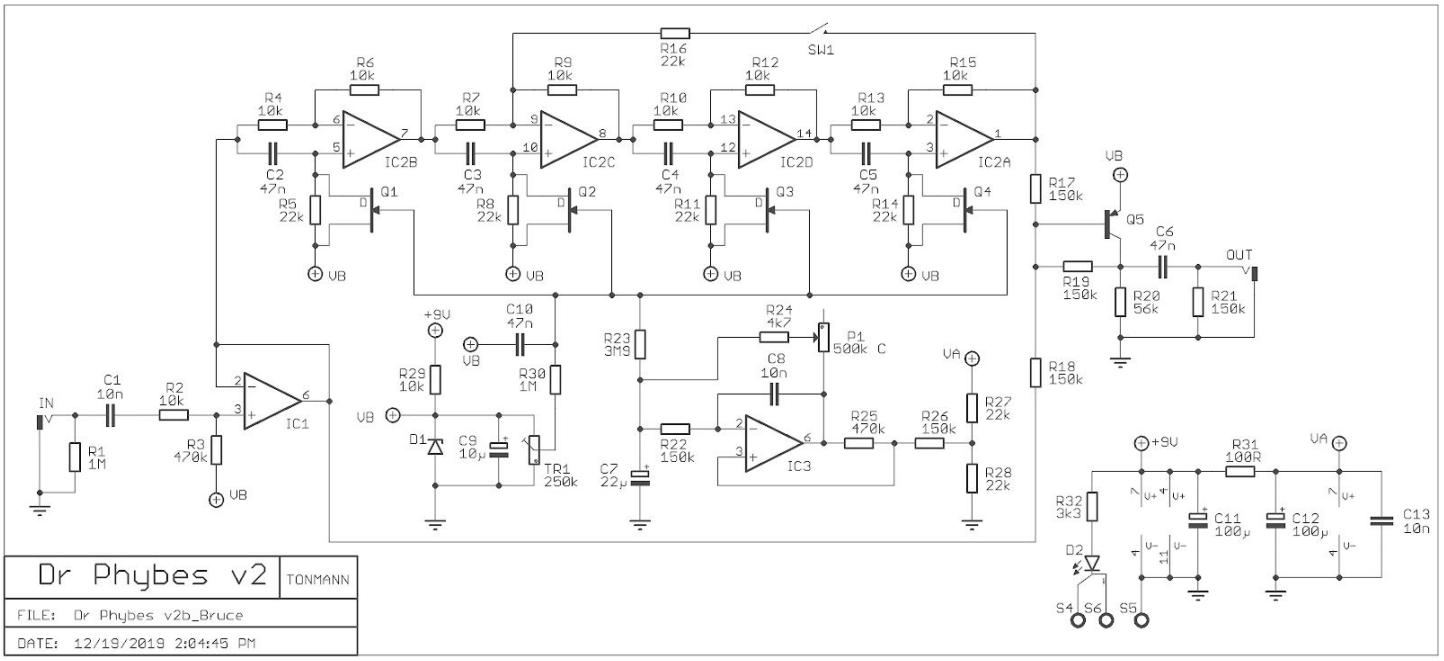

IC1 and IC3 are standard pin-out mono op amps. Although any standard mono op amp can be used, a TL071 offers reasonable noise and response specifications, the TL061 is ideal for LFO (Low Frequency Oscillator) applications, its low current characteristics reduce the chances of “ticking” in the audio part of the circuit.

Q5 is a general purpose PNP silicon transistor; possible substitutes are 2N3906, 2N5087, BC559B.

Dr Phybes includes the“R28” or “Script” mod, this is R16 in the circuit. Some of the phased output signal is fed back to the second stage of phaser section via R16, although this makes the phased sound more pronounced. The switch SW1 disconnects the feedback path. **If you don’t envisage using the feedback feature, don’t install SW1 or R16.** Another approach would be to increase the value of R16 to reduce any amount of feedback, although I would suggest something like 33kΩ or 47kΩ. **We much prefer Wilkie1’s 45/90 Mod in the 1st Mod Diagram under the Mod section.**

There are other mods that can be made to the circuit, these will be posted below as well.

STATUS LED

D2 is a common anode bi-colour LED

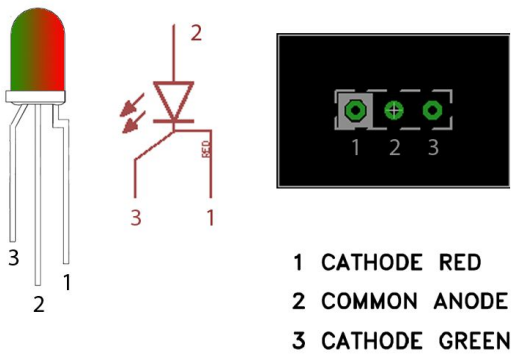

The diagram above shows the pin-out, schematic symbol and pad connection for a common anode LED.
The pin-out for the bi-colour LED is as follows:

1st Colour Cathode	90 degree bend in the lead
Common Anode	Middle lead
2nd Colour Cathode	45 degree bend in the lead

The pad for lead 1 on the circuit board is marked with a white box.

When connected correctly the LED will light red when power is applied and the circuit is in bypass mode. The LED will light green when in effects mode. **If you wish to use a standard LED, connect the anode to the middle pad and the cathode to the right (non-white) pad to show the circuit in effects mode.**

WIRING

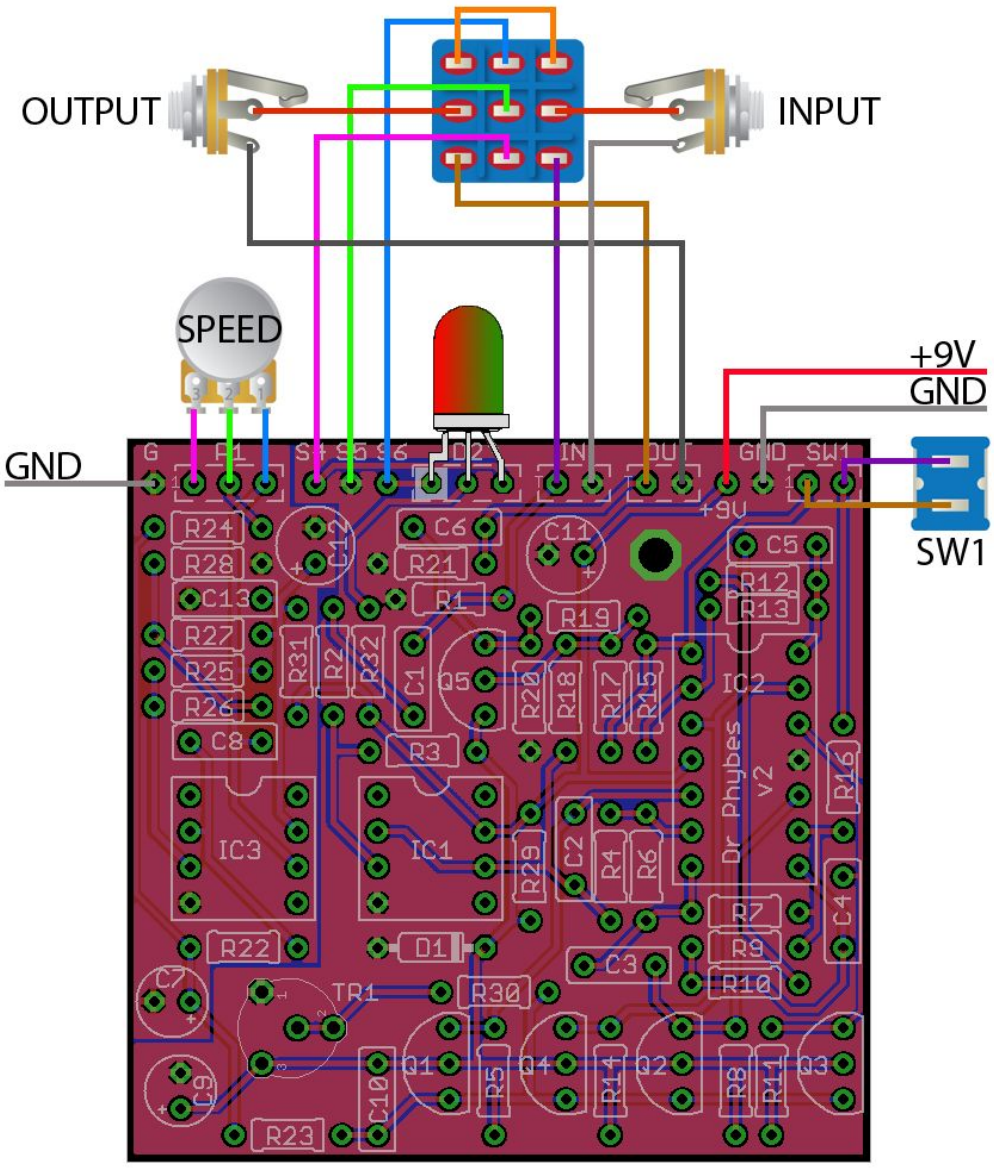

Note that there are **two ground pads**, **<u>both ground pads must be wired</u> to ground for the circuit to function**. Both ground wires should be connected directly to the power supply ground for optimal performance.

Use one of GuitarPCB's 3PDT Wiring Boards pads S4, S5, S6. D2 and R32 are not installed.

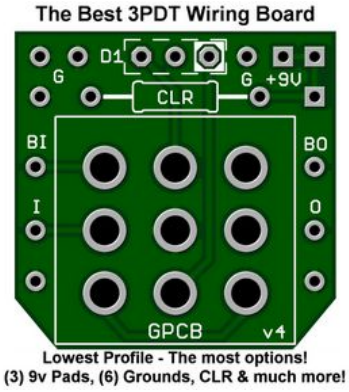

Mods: Not included with kits.

Courtesy of Wilkie1 - 45/90 Mod
We like this mod as a better alternative to the Script Mod using SW1. Skip SW1 and try this.

DR. PHYBES 45/90 PHASE MOD

Decide on this Mod before populating R10 and R17

Dr. Phybes usually operates with a phase 90 function. But you can switch it to a phase 45 function simply by adding a DPDT switch. Follow these simple instructions and you will have a totally different tonal palette!

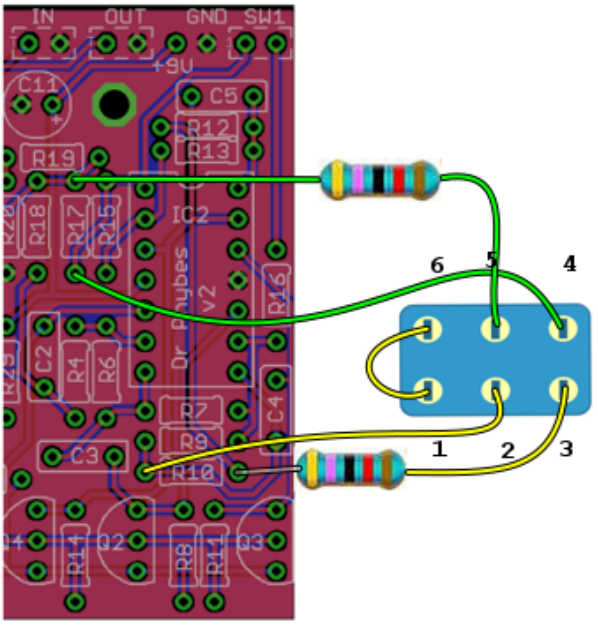

OPERATION

When the DPDT switch is connecting lugs 1-2 and 5-6, the Phase 45 feature will be active. SW1 will be inoperative.
When the DPDT switch is connecting lugs 2-3 and 4-5, the normal Phase 90 mode will be active. SW1 will provide signal feedback when closed.

INSTRUCTIONS

1. Lift R10 leg from pad that connects to Pin 8 of IC2C.
2. Connect R10 leg to lug 3 of DPDT.
3. Connect empty R10 pad to lug 2 of DPDT.
4. Add a jumper from lug 1 to lug 6 of the DPDT.
5. Lift R17 leg from pad that connects to pin 1 of IC2A.
6. Connect R17 leg to lug 5 of DPDT.
7. Connect empty R17 pad to lug 4 of DPDT.

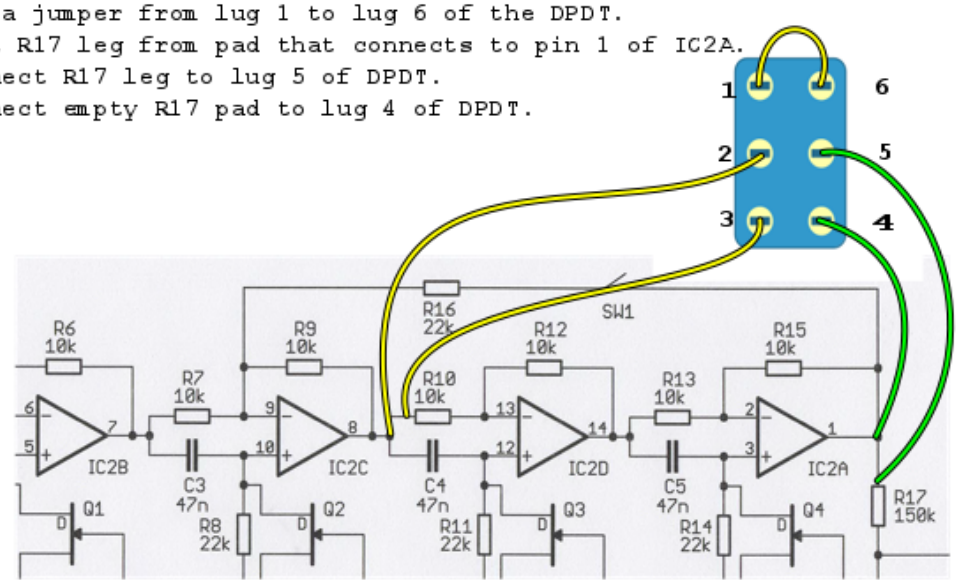

The wiring must be exactly as shown above for the Mod to function. If you lose signal be sure the wiring is correct, the jumper is installed and your switch is good.

All Mods and main circuits are always 100% verified by multiple builders.

Mod by wilkie1 2017

Courtesy of Wilkie1 - LED Rate Mod:

DR. PHYBES RATE LED MOD

A simple way to add a visible rate indicator that will function regardless of the bypass switch setting.

Choose a value for the CLR (Current Limiting Resistor) to provide your desired brightness. A higher value will give less brightness.

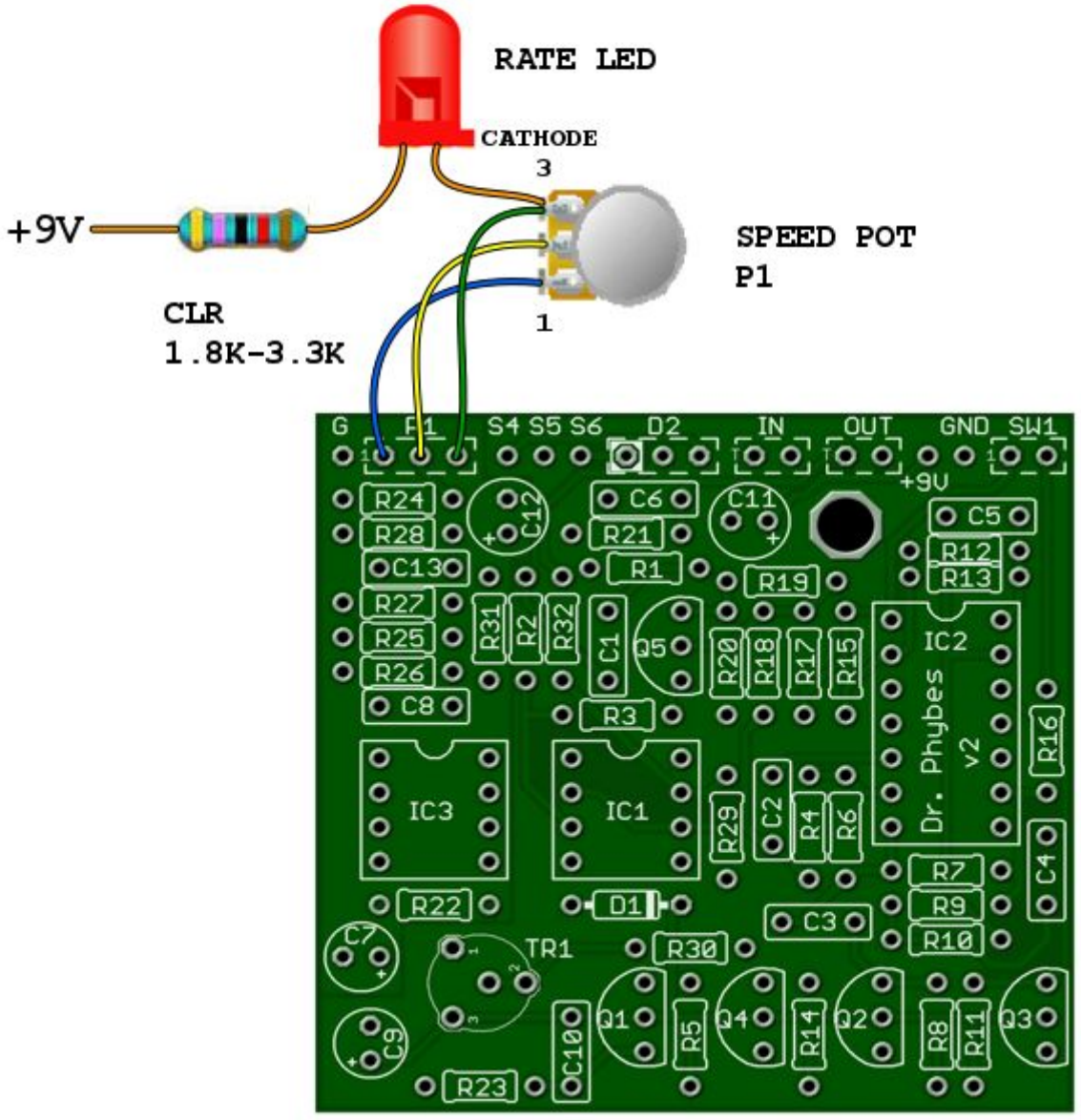

More mods next page...

MOD3:
For a more Vibe sounding circuit change the stock values as shown below.

R17 - 100k
C2 - 6.8n
C3 -10n
C4 -220p
C5 - 2.2n
C7 - 10u

MOD4:
The C7 Mod

Lowering the value of C7 will increase the LFO speed. Changing C7 from 22µF to 10µF is perhaps not a good idea but to be able to switch from one capacitor to the other via a DPDT ON-ON switch will increase the range of the Speed pot.

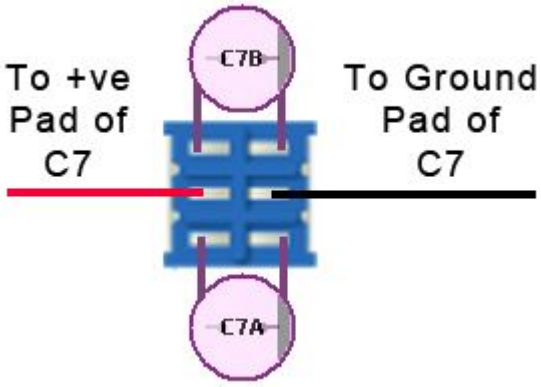

Soldering Tutorial on Youtube

Need a kit? Check out our authorized worldwide distributors:

USA – Check out PedalPartsAndKits for all your GuitarPCB kit needs in the USA.

Europe – Das Musikding Order either boards or kits direct from Europe.

PedalPartsAustralia - Order either boards or kits direct from Australia

If they do not have a KIT listed send them a note asking if they can help you out.

This document, PCB Artwork and Schematic Artwork © GuitarPCB.com. Schematic, PCB and this document by Tonmann, Wilkie1, Bruce R. and Barry. All copyrights, trademarks, and artworks remain the property of their owners.Distribution of this document is prohibited without written consent from GuitarPCB.com. GuitarPCB.com claims no rights or affiliation to those names or owners.