D’Lay by GuitarPCB

Based on an Analog Style Delay but with added Delay time of up to 350-400ms, or slightly longer depending on quality of the PT2399 chip you use. Many months and trials went into perfecting this to be the best PT2399 based DIY delay available. This is an Advanced Build. - Not suggested for beginners.

We also carry the **D'lay Tap Tempo** board available separately in our SHOP. Not mandatory.

Disclosure: GuitarPCB is not responsible for the availability of pre-programmed Tap Tempo Chips. These are sold by another site (ToneGod). Be sure you purchase a chipset before ordering a Tap Tempo board.

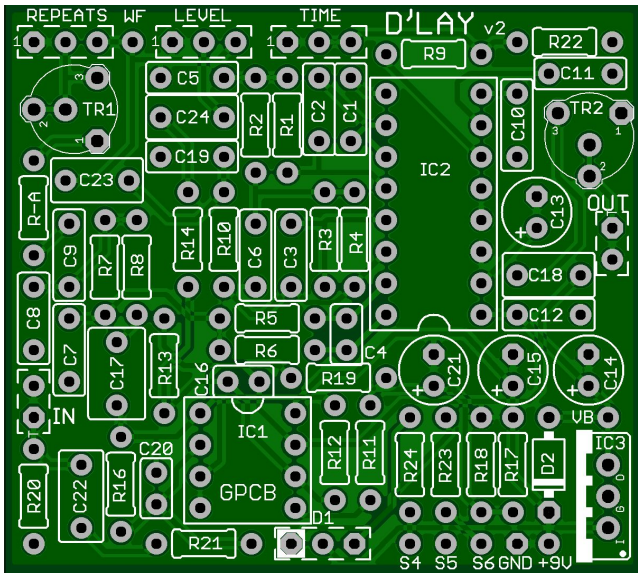

Part	Value
R-A	see text
R1	12k
R2	12k
R3	12k
R4	22k
R5	47k
R6	12k
R7	12k
R8	12k
R9	1k
R10	2k7
R11	1k
R12	22k
R13	*68k
R14	*22k
R16	510k

Part	Value
R17	12k
R18	12k
R19	220k
R20	1M
R21	510k
R22	82k*
R23	1k8
R24	1k8
C1	220n*
C2	220n*
C3	1n
C4	560p
C5	10n
C6	10n
C7	10n
C8	27n

Part	Value
C9	100n
C10	100n
C11	100n
C12	100n
C13	47µ
C14	100µ
C15	47µ
C16	51p
C17	470n
C18	220n
C19	10n
C20	33p
C21	47µ
C22	100n
C23	220n
C24	220n

Part	Value
D1	**CA Bi-Color LED**
D2	1n4001
IC1	**TL072 or NE5532**
IC2	PT2399
IC3	7805
TR1 (see text)	5k
TR2 (Volume)	100k
REPEATS	C50k
LEVEL	B100k
TIME	B100k

*See build notes

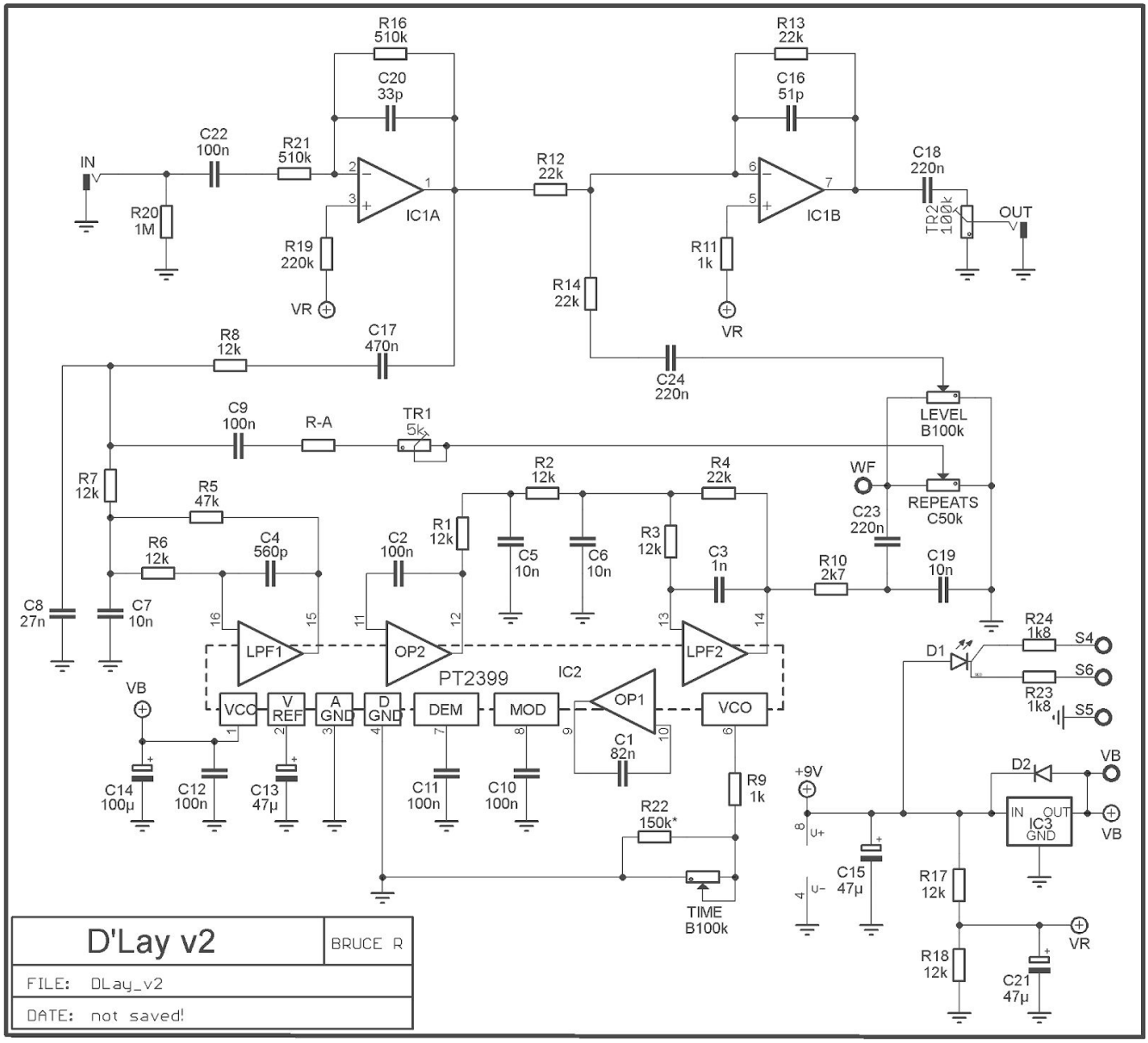

- Quite a few capacitors in the audio path were converted from electrolytic to poly film box caps in version 2
- Some capacitor values were changed, but these do not introduce new filtering of guitar or bass frequencies.
- The bi-color LED was added with 2 CLR's, one for each color, to allow you to adjust the brightness of each color independently.
- The final gain stage (IC1B) was adjusted to produce more volume (previously did unity gain), and provides a volume trim pot (TR2) that can also be wired to a regular potentiometer for external adjustment if you wish.
- The 5V voltage regulator was changed from an L78**L**05 to an L7805. This was done so that this board can also provide 5V to the optional tap tempo board. This larger unit may be bent over the neighboring components.
- The R-B resistor was replaced with a trimmer (TR1) to make it easier to adjust if you decide you want to allow infinite repeats by turning the repeats knob all the way up.
- R13 should be a 68k resistor when using TR2 Trimmer. This helps you fine tune the overall Level to your liking, however if you wish to bypass TR2 then Jumper pads 2 & 3 and use a 22k at R13. This should be close to unity.

Build Notes

- C1 and C2 are 220n. When you source these parts, please order a model that is 2.5mm in thickness
- R7 is changed to 12k to make for using the “Infinite Repeats Mod” easier. The value will work either way.
- R14 – 22k will be best with most builds depending on potentiometer tolerance. **Try 22k to 33k if needed.**
- If you do not wish to have a volume control at all, you can wire this board to be unity gain by changing R13 to 22k and putting a jumper between pads 2 and 3 of TR2. As mentioned previously, a regular A100k pot can be used in place of the trimmer if you wish to have a volume knob.
- Resistor R-A and TR1 (which was fixed resistor R-B) determine the sensitivity of the Repeats pot. The Alpha pots most people use in their pedals have a 20% tolerance, so a trimmer makes the most sense. You may or may not want to have the Repeats knob to provide infinite repeats at full rotation, but the trimmer can be set to adjust to “just shy of infinite repeats” or “just to the point of infinite repeats”. The Tonepad Rebote delay, from which this circuit was based and modified, calls for a 15k of resistance before the Repeats pot, and calls for 10k to allow infinite repeats. Use either an 8k2 resistor for “R-A” and a 5k trimmer for TR1. If your repeats pot measures higher or lower than the 50k (between lugs 1 and 3), you may need to increase or decrease the R-A fixed resistor (the range should be 6k8 to 10k) to allow your trimmer to give you the desired repeats.
- The “WF” pad is for the “Warmoth Fanatic” Warp modification, which allows you to install a “normally open” SPST momentary stomp switch that engages temporary infinite repeats as long as it is depressed. To implement this mod, you will connect one lug of the switch to the “WF” pad, and solder the other lug to pin 1 of TR1.
- R22—The PT2399 delay chip was designed to deliver a maximum of 340ms of delay time. Many DIY’ers try to increase this time, which almost always introduces additional noise or motor boating. If you use an 82k resistor in R22, you will get between 350-400ms of delay time when the delay pot is turned all the way up. If you increase this value (increase resistance), the chip will attempt to deliver longer repeat times, but the fidelity of the repeats decreases and noise increases. Likewise, if you decrease the value of R22, the quality of the repeats increases, and noise decreases. You may find that 91k to 110k works well to give slightly longer delay times.
- PT2399—Additional comments: There have been reports of fake 2399 chips being sold on Ebay. We recommend that you buy from a reputable dealer. Princeton Technology Corporation (PTC) is the primary manufacturer. Some known fakes say “DTC” but not all of them.

STATUS LED

D1 is a common anode bi-color LED

The diagram above shows the pin-out, schematic symbol and pad connection for a common anode LED. The pin-out for the bi-color LED is as follows:

The lead 1 pad on the circuit board is marked with a white box.

When connected correctly, the LED will light red when power is applied and the circuit is in bypass mode. The LED will light green when in effects mode. **If you wish to use a standard LED, connect the anode to the middle pad and the cathode to the right pad (non-white) to show the circuit in effects mode.**

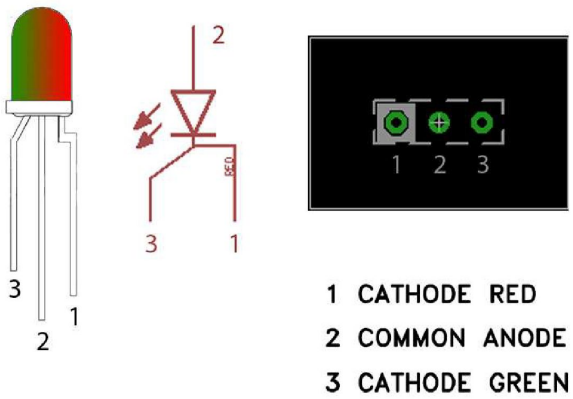

Standard Wiring Diagram

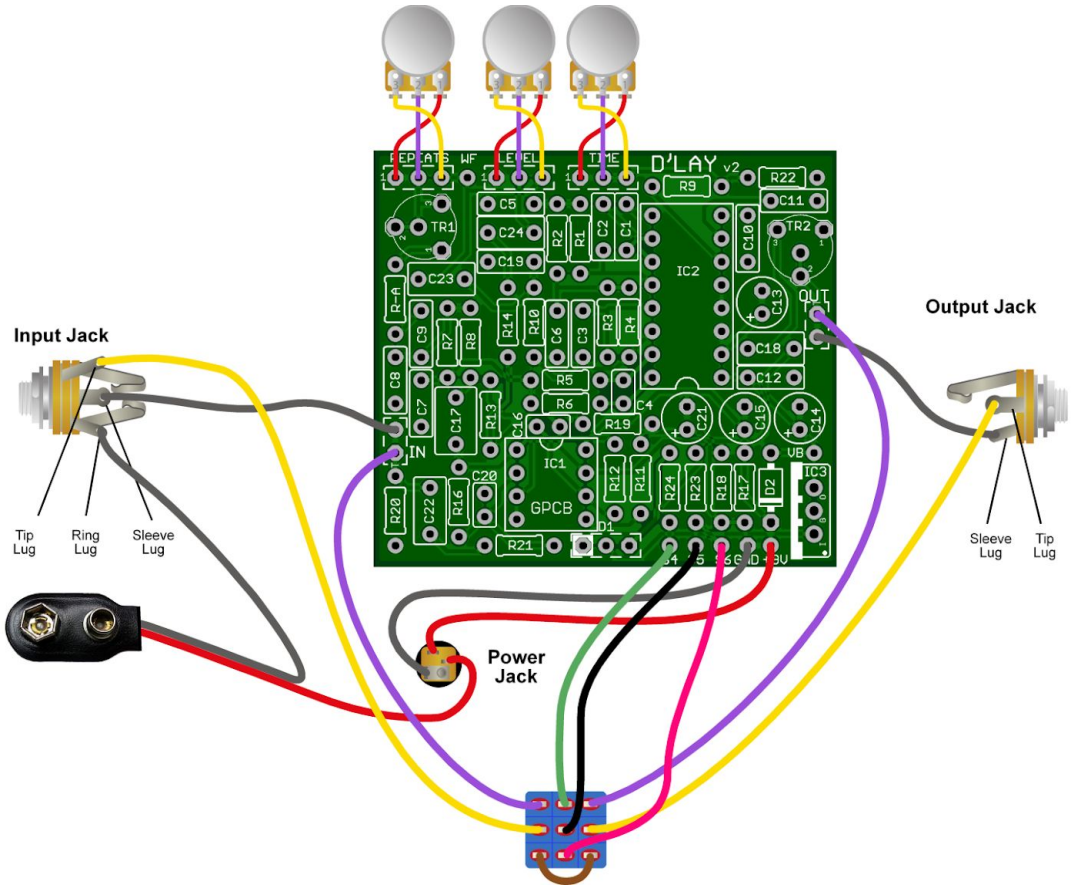

WF Runaway MOD

The **"WF" pad** is for the "Warmoth Fanatic" Warp modification. This requires installation of a momentary SPST stomp switch that will produce infinite repeats as long as it is depressed. To implement this mod, you will connect one lug of the switch to the **"WF" pad**, and solder the other lug to **pin 1 of TR1**. When depressed, the switch bypasses the resistance of TR1 and allows the repeats to run away. **Caution this can get loud.**

R22—The PT2399 delay chip was not really designed to deliver 700ms of delay time, which is what it will be set to do when R22 is at 150k. As you increase the delay time that this chip can deliver, the lower the fidelity of the repeats or create distortion. The results will vary from chip to chip as well. We do not expect that everyone will be able to squeeze 700ms of delay time out of every PT2399 chip. If your repeats sound very low-fi, try decreasing **R22 to ~82k**, which will deliver higher quality, but less maximum delay time.

The specifics of R12 and R14 explained, courtesy of Tonmann:

The level pot should be controlling the level of the wet signal while TR2 controls the level of the output (wet + dry) signal. Alternatively...

IC1B is configured as a mixer or summing amplifier. It adds, or sums, an amount of the dry signal via R12 to the wet signal via R14.

The gain of the dry signal at IC1B is set by the ratio of R13 to R12, with a nominal value for both resistors at 22kΩ the dry signal gain is 1. To increase the gain for the dry signal the value of R12 is made smaller, to decrease the gain for the dry signal the value of R12 is made larger. (continued next page)

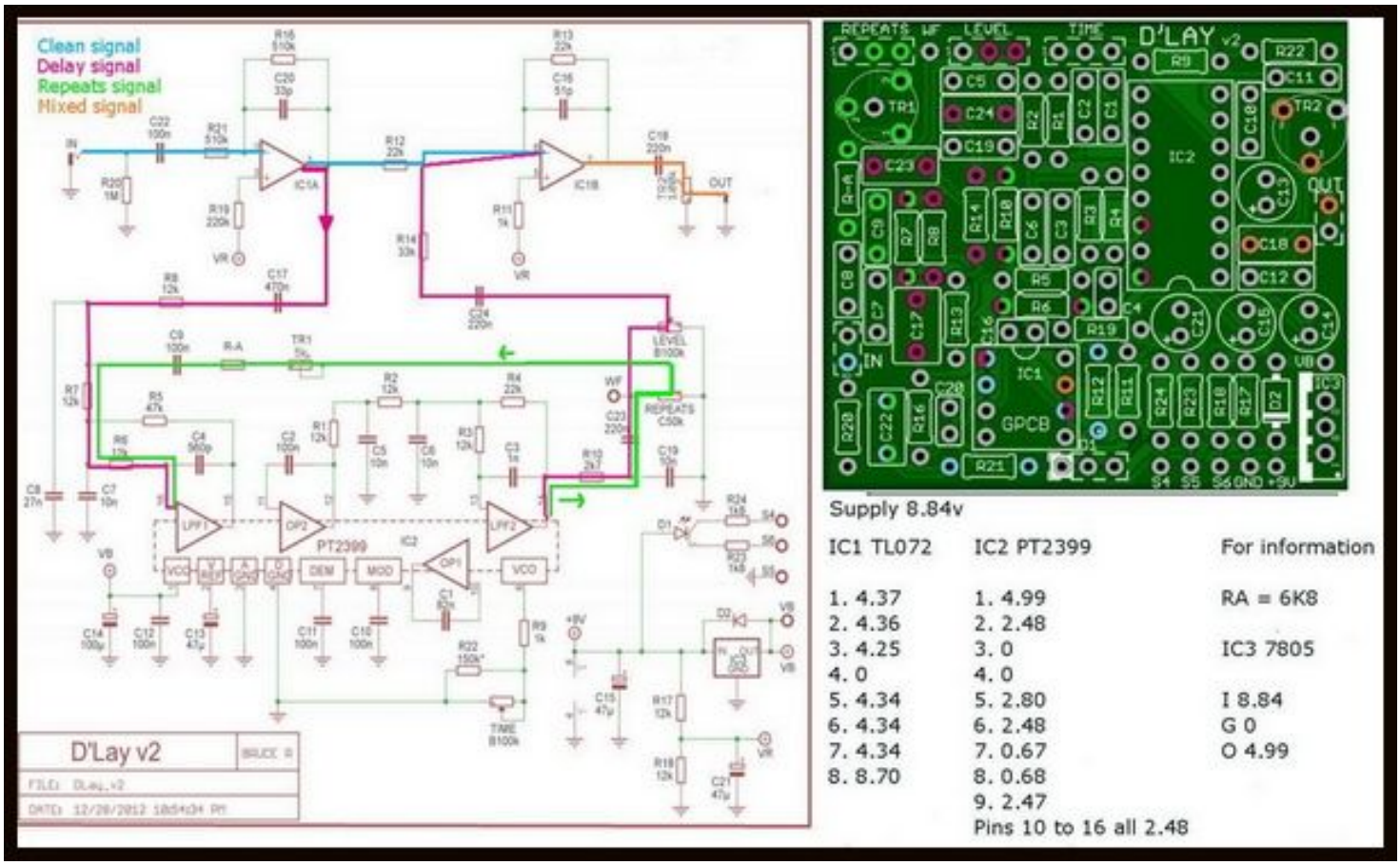

Likewise, the gain of the wet signal at IC1B is set by the ratio of R13 to R14, with a nominal value for both resistors at 22kΩ the wet signal gain is 1. To increase the gain for the wet signal the value of R14 is made smaller, to decrease the gain for the wet signal the value of R14 is made larger.

While the gains for the wet and dry signals can be set independently via R14 and R12 respectively, the overall gain can be set by R13. If you leave both R14 and R12 at their nominal values of 22kΩ you can increase the gain for both by making R13 larger or decrease the gain for both by making R13 smaller.

Armed with the above knowledge you should be able to adjust the level of the wet signal by changing the value of R14.

Soldering Tutorial on Youtube

Need a kit? Check out our authorized worldwide distributors:

USA – Check out PedalPartsAndKits for all your GuitarPCB kit needs in the USA.

Europe – Das Musikding Order either boards or kits direct from Europe.

PedalPartsAustralia - Order either boards or kits direct from Australia

If they do not have a KIT listed send them a note asking if they can help you out.

This document, PCB Artwork and Schematic Artwork © GuitarPCB.com. Version 1 Schematic and PCB by DCountry13. Version 2 Schematic (based on v1), PCB and this document by Bruce R. and Barry. Special thanks to Tonmann for many of the modifications. Distribution of this document is prohibited without written consent from GuitarPCB.com. Trademarks and brands mentioned above belong to their respective owners.