Bass OverDriver

Bassists need dirt too! Replicate an SVT, sound like Chris Squire, Jack Bruce, Grand Funk, or just about anything in between! No one, until now, has offered something that works, with all the full, rich bottom-end that you need, while dialing up big vintage tube tones, bright modern slap sounds, gnarly distortions, or chiming Entwistle style tone.

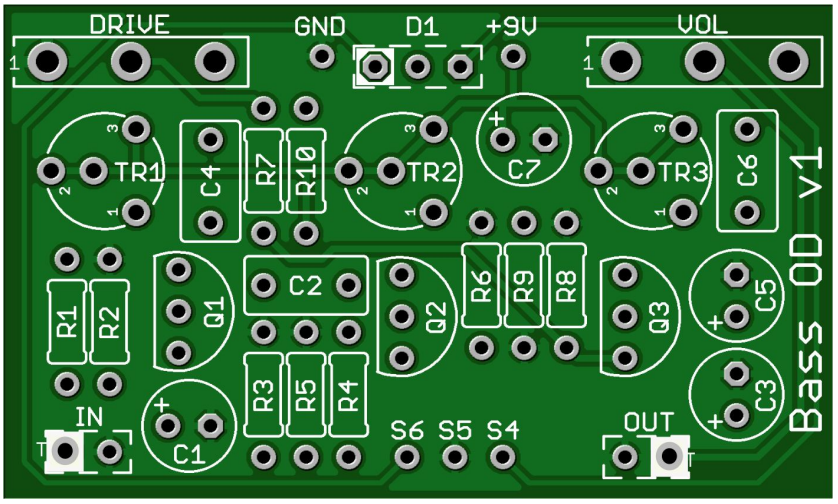

Board Dimensions (W x H) 1.95” x 1.19” ca. 49.5mm x 30.2mm

SCHEMATIC

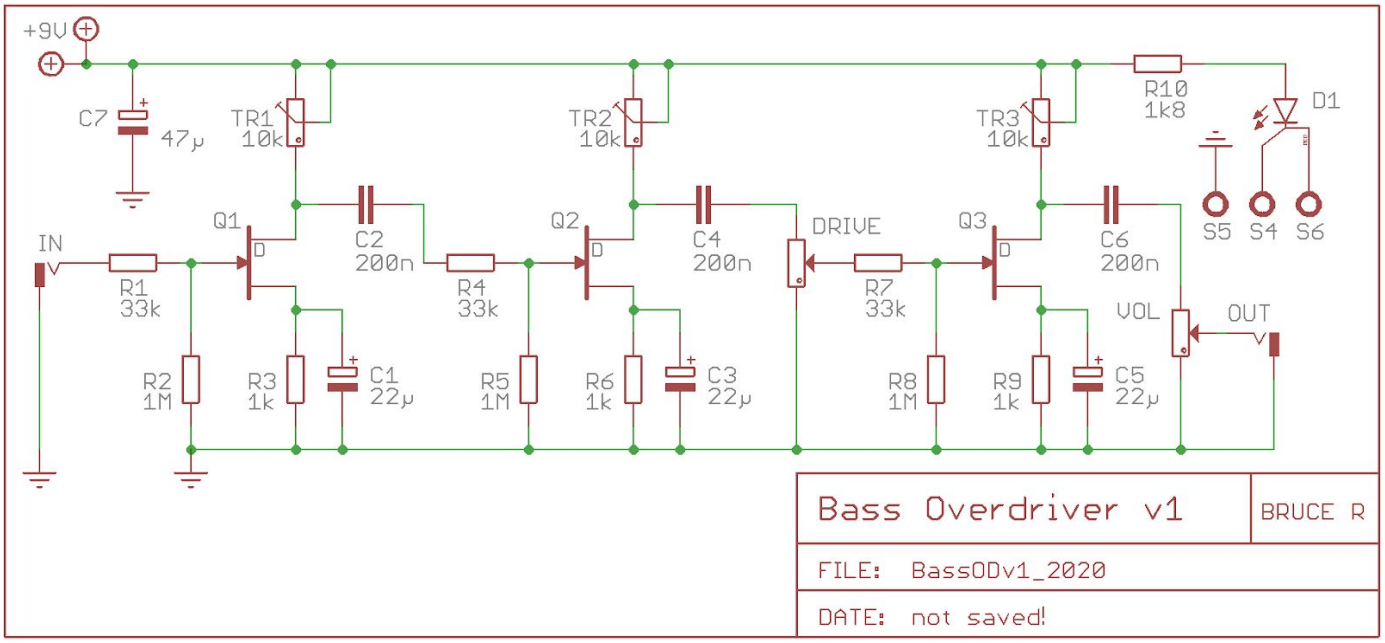

PARTS LIST

Part	Value
R1	33k
R2	1M
R3	1k
R4	68k
R5	1M
R6	1k

Part	Value
R7	68k
R8	1M
R9	1k
R10	1k8
C1	22µ
C2	220n

Part	Value
C3	22µ
C4	220n
C5	22µ
C6	220n
C7	47µ
Q1 – Q2	J113

Part	Value
Q3	2N5457
DRIVE	100k Lin
VOL	100k Log
TR1 – TR3	10k*
D1	Bi-color CA LED

* see text

BUILD NOTES

The three trim pots (TR1 – TR3) are used to set the bias voltages at the drains of Q1 – Q3 initially to 5V. The drain pin for each JFET is the top pad, looking at the diagram above, for each JFET.

We suggest using *10k Trim Pots with both 2N5457 and J113 transistors.

Although it is recommended to bias each JFET to 5V, there is nothing to stop you from experimenting with different bias voltage; suggestions are to bias Q1 and Q2 both to a slightly higher voltage (same bias voltage for both) and leave Q3 at 5V. We have found through testing that for Bass a consistent 5v at Q1 – Q3, seems to be best.

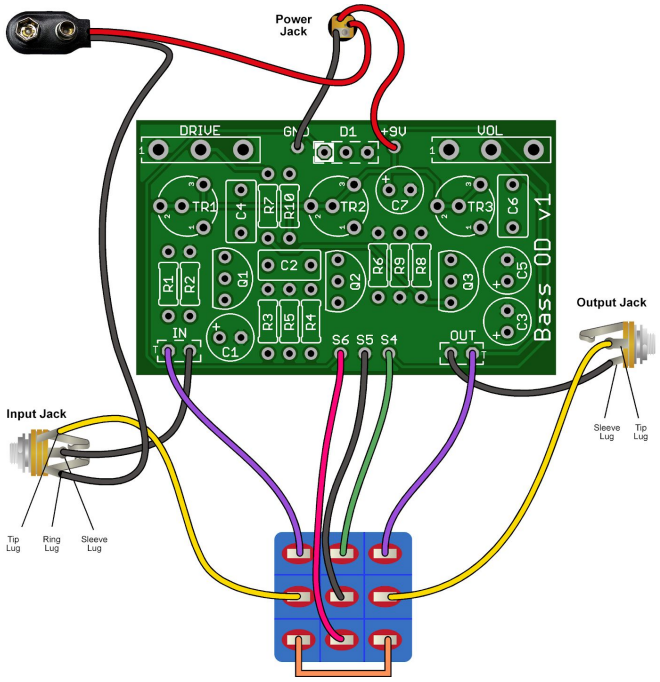

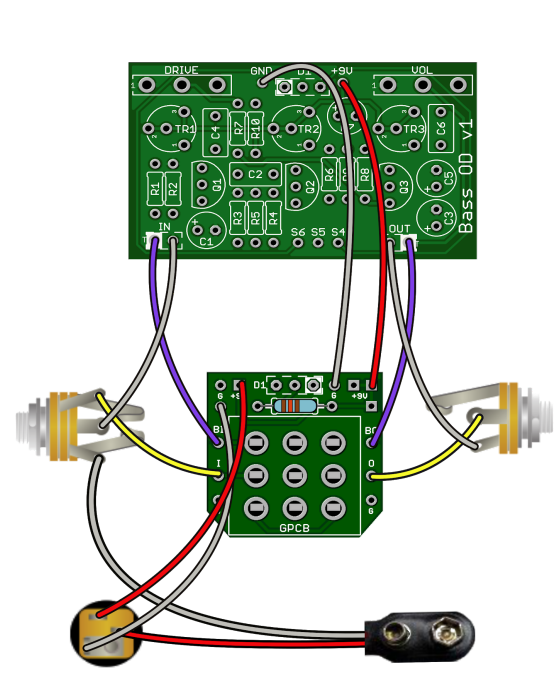

Be sure your In/Out Jack wiring is correct. A Stereo Jack (for battery use only) has a RING lug which is used to connect to the battery ground. If you do not intend to use a battery there is no need for a Stereo Jack. If using Stereo then only use the Tip and Sleeve lugs. S4, S5 & S6 is only needed when the LED is wired to the Main Board.

If using our convenient 3PDT Wiring Boards (below) here is an LED wiring guide. You may use Common Anode Bi-Color or Standard On/Off. The wiring boards use the same symmetrical layout as if wiring straight to the switch.

STATUS LED

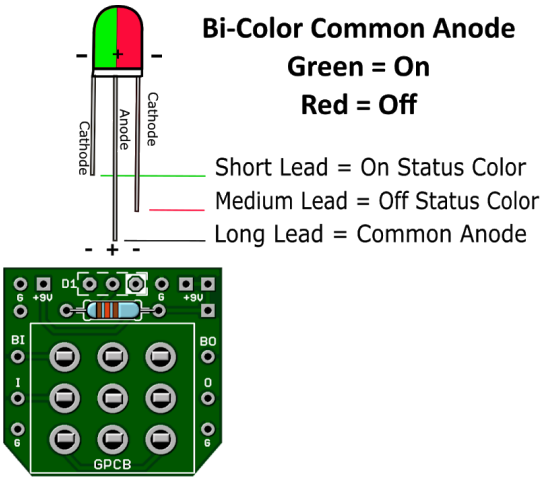

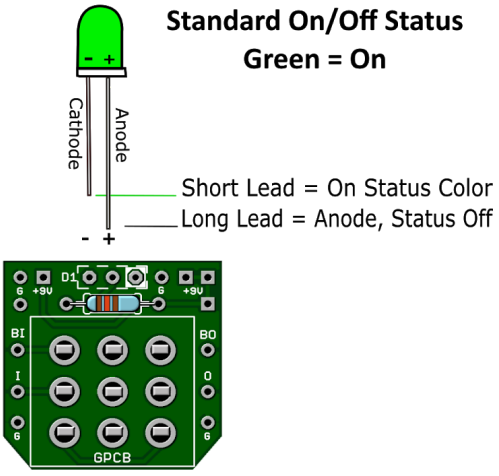

Note: If wiring the LED to our 3PDT board no need to connect S4, S5 & S6 or populate D1 or R10 (CLR) on the main board since you are wiring your LED directly to our board.

Direct Online Link: [3PDT Wiring Board Build Document]

DRILL TEMPLATE

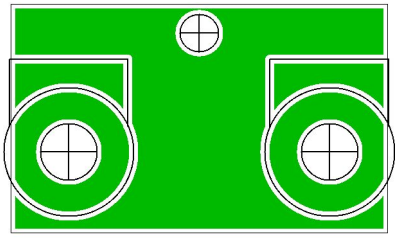

Drill Tips: Measure your components before selecting a drill bit. We recommend drilling the pot holes, mounting the pots in the enclosure, and then soldering the pots to the board. This approach should resolve the issue of the pots not fitting through the holes after soldering. We also recommend you make the holes for the pots a little larger than the threads in case you decide to remove the board and put it back in during the build, to avoid problems. Use this guide at your own risk. Make sure page scaling is turned off when you print this PDF, or the image above may be smaller than expected. Verify everything before drilling.

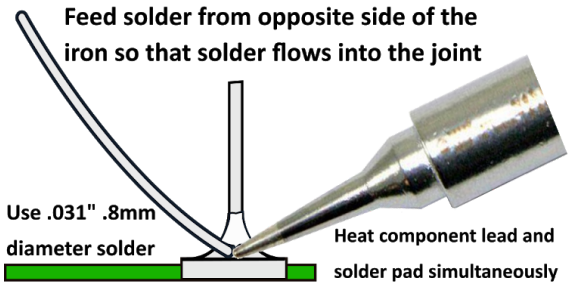

A good solder joint should be shiny and look like this:

* Carefully re-flow suspect solder joints.
* Clean and tin your Tip regularly.

When soldering wire to the board push the protective PVC jackect flush with the board and pad.

Use the right tools for the job and be patient.
If you need help ask questions first at the GuitarPCB forum.
We are there to help and we know our products best.

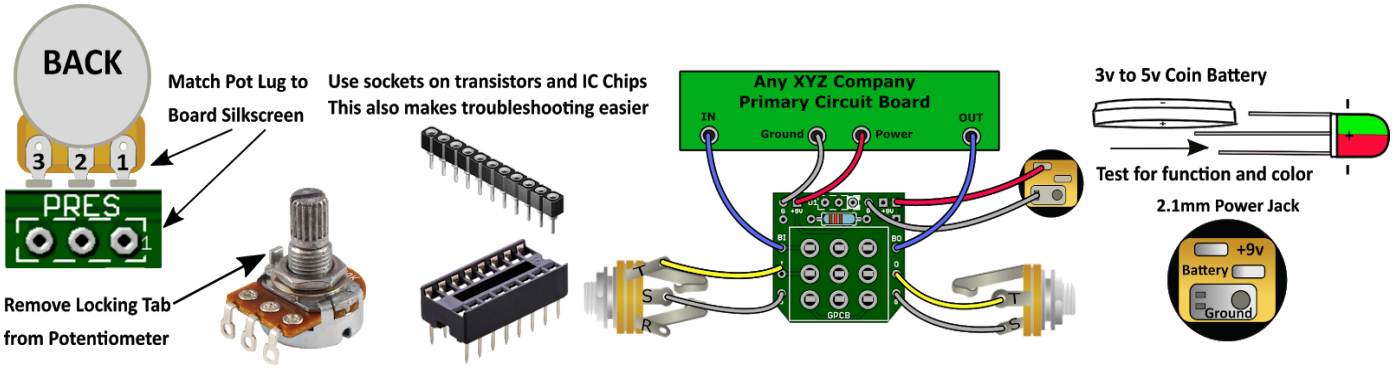

[Soldering Tutorial on Youtube]

Need a kit?

USA – Check out [PedalPartsAndKits] for all your needs.
Europe – [Das Musikding] carries both boards and kits as a service to our Europeans friends.
Australia - [PedalPartsAustralia.com] carries GuitarPCB Boards and Kits direct.
If they do not have a KIT listed send them a note asking if they can help you out.

This document, PCB, Artwork and Schematic Artwork © GuitarPCB.com. Schematic and PCB design by Bruce R. and Wilkie1. Build Document by Bruce R. Wilkie1 and Barry. All copyrights, trademarks, and artworks remain the property of their owners. Distribution of this document is prohibited without written consent from GuitarPCB.com. GuitarPCB.com claims no rights or affiliation to those names or owners.