GuitarPCB.com

Angry Red Camel Build Instructions

This circuit is based on the Tube Sound Fuzz by Craig Anderton and also similar to the Red Llama™ by Way Huge™. We took this idea a huge step further by adding a gain stage at the end of the circuit. Now you can get that same great tone as the Llama plus a whole lot more by simply turning the Boost knob from 12:00 to Full Up. With the Boost at 12:00 the added Gain stage will be at Unity with the main circuit providing amazingly enhanced traditional tones and by moving it clockwise you will add more gain creating more available distortion than the original circuit while preserving the character of the original. The Morning Glory circuit utilized similar advantages by doing the same thing to the original Bluesbreaker style pedal. We believe this is exactly what the Doctor ordered!

Board Dimensions (W x H) 1.95 x 1.65 inches, i.e.: 49.5 x 41.9mm. This design will fit into a 1290NS/1590B size enclosure or larger.

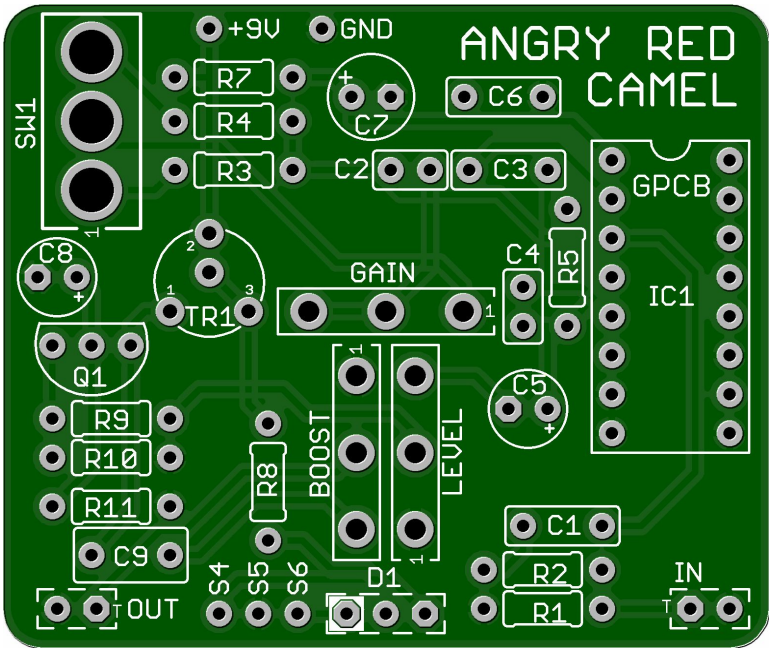

PARTS LIST

Part	Value	Part	Value	Part	Value
R1	1M	R11	1k	C9	220n
R2	100k	C1	68n	Q1	J113
R3	270k to 330k*	C2	100p	TR1	5k to 10k
R4	10M	C3	33n	D1	BiColor CA LED
R5	1M	C4	100p	SW1	SPDT ON-ON
R7	100R	C5	10uF	BOOST	A100k
R8	1k8	C6	100n	GAIN	B1M
R9	33k	C7	100uF	LEVEL	A10k
R10	1M	C8	22uF	IC1	CD4049UBE

- J113's are typically available in our shop as well as trimmers and other accessories.

SCHEMATIC

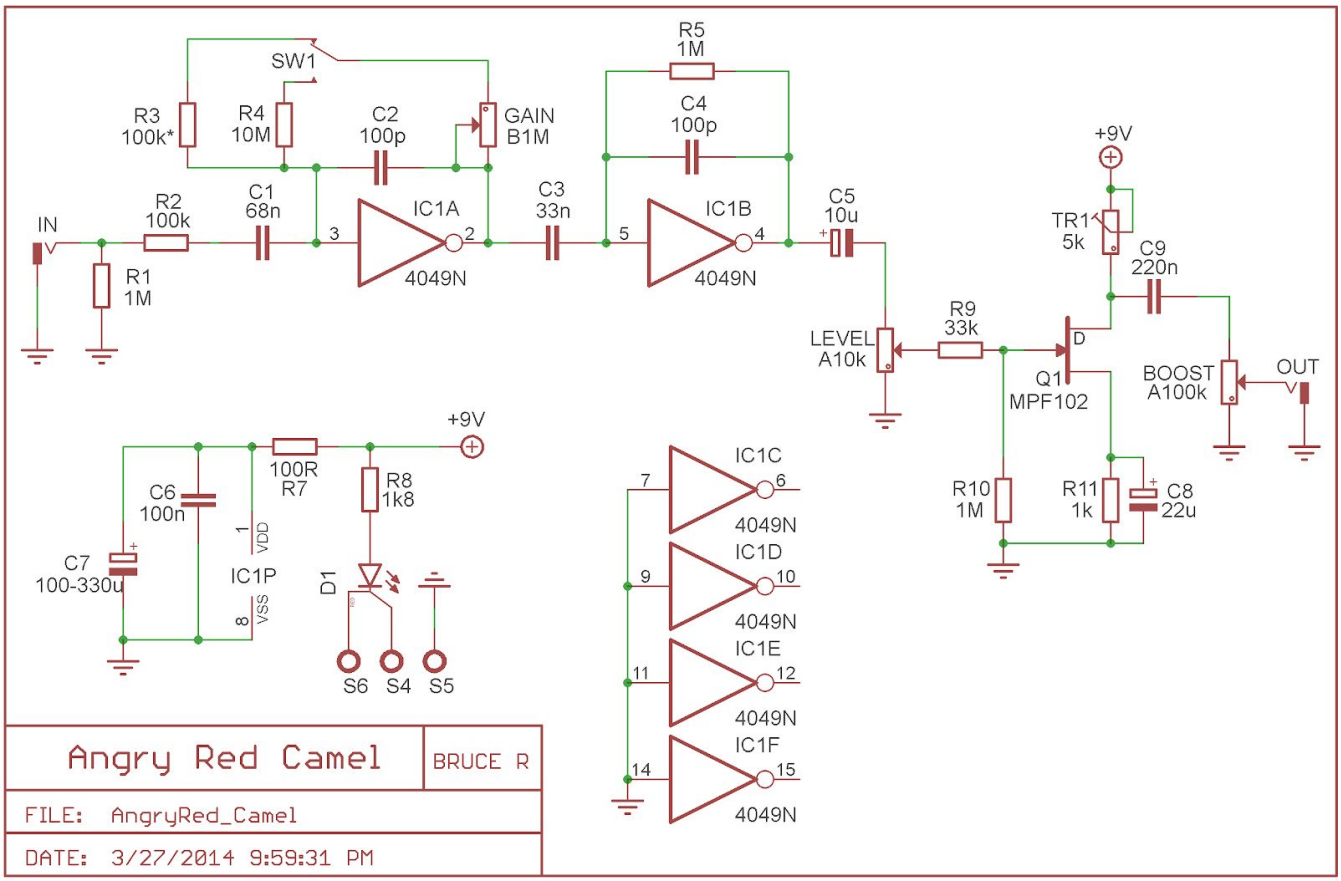

STATUS LED

D1 is a common anode bi-color LED. The diagram at right shows the pin-out, schematic symbol and pad connection for a common anode LED. The pin-out for the bi-color LED is typically (but not always) as follows:

1st Color Cathode	Is on the "f LED (see gr bend in the
Common Anode	Middle lea
2nd Color Cathode	45 degree

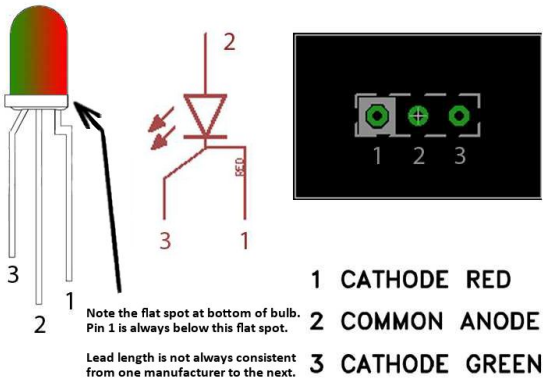

The lead 1 pad on the circuit board is marked with a white box.

When connected correctly, the LED will light red when power is applied and the circuit is in bypass mode. The LED will light green when in effects mode. If you wish to use a standard LED, connect the anode to the middle pad and the cathode to the right pad to show the circuit in effects mode. If you use a 3PDT wiring board that includes an LED, you can omit this LED and R8. R8 is the LED's Current Limiting Resistor (CLR). If you use a different LED, you may want to change this value to adjust LED brightness.

IMPORTANT NOTES

- **R3** can technically be anything between 100k and 1M, **although a range of 270k to 330k is suggested**. This affects the level of gain in one position of SW1. The lower you go, the more difference there will be between the 2 settings of the switch. If you like to experiment socket and try different values.
- **TR1** adjusts the bias of the boost portion of the circuit. To set the bias, measure the voltage between the drain leg of Q1 and any ground. Set the trimmer so that this voltage is roughly 4.5v to 5V.
- **The Boost needs to be at 12:00 for Unity Gain and then you can adjust it up for extra gritty tone or even down for attenuation. This is a very useful for different situations when using with multiple guitars & pickup variations.**

WIRING DIAGRAM

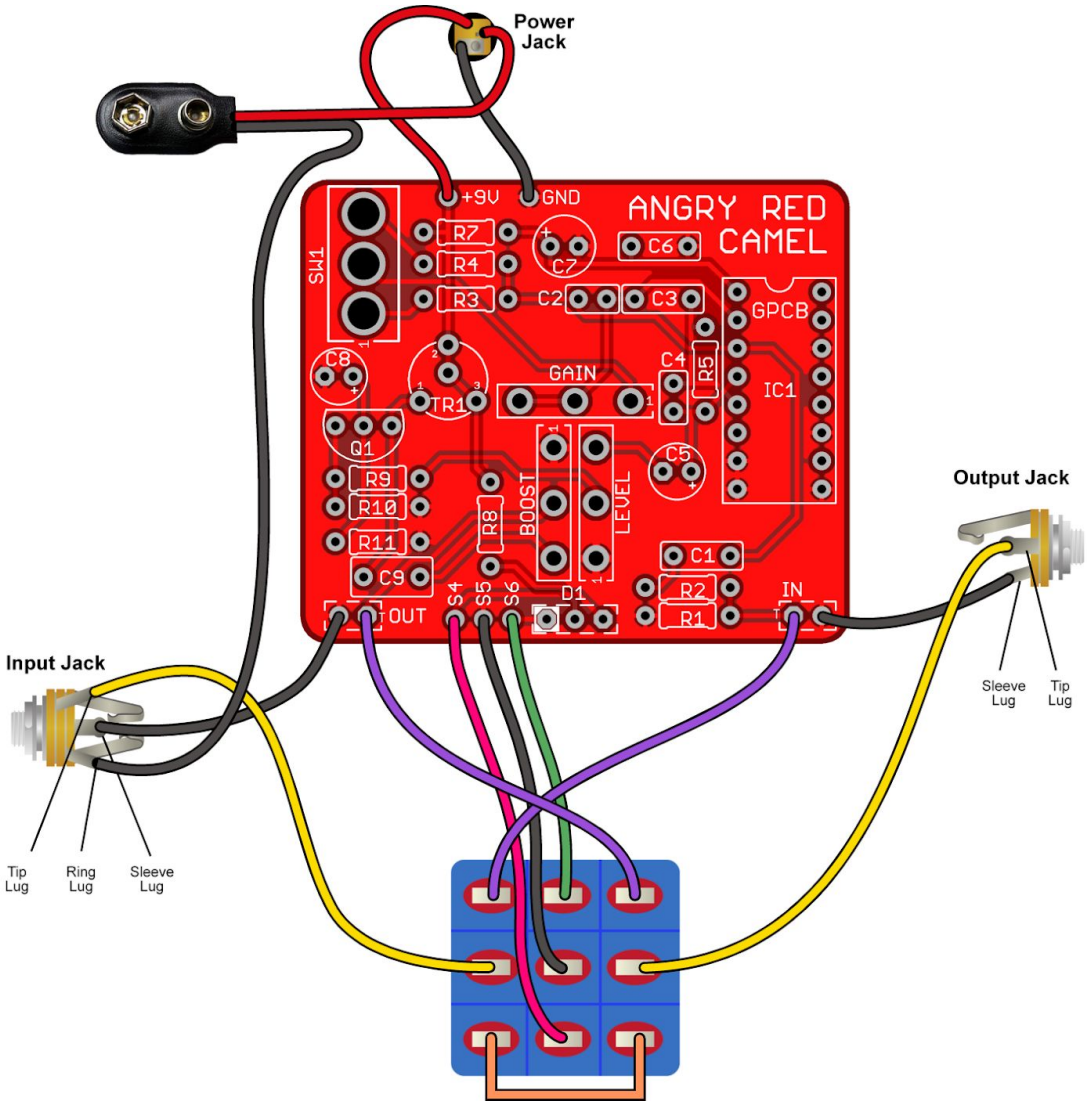

In the wiring diagram above, you will notice that the board design contains the In and Out hookups on the opposite sides of the pedal that you would normally find them. This is fine since the **"Purple Wiring"** in the diagram addresses this by crossing the audio wires over to the correct side of the 3PDT Footswitch. Also the sleeve of each jack is connected to a ground pad on the board next to the input pad or output pad. It does not matter to which ground pad each jack is connected, as long as the sleeve is connected to ground. Finally the pads under both "In" and "Out" **marked "T" is the Audio input & output**, and are adjacent the ground pads.

DRILLING GUIDANCE FOR POTS and LED

We suggest you print this and use as a template for drilling your enclosure. When printed, the border of the board should measure 1.95 x 1.65 inches, i.e.: 49.5 x 41.9mm. This template is to be used on the outside of the enclosure for marking of the holes.

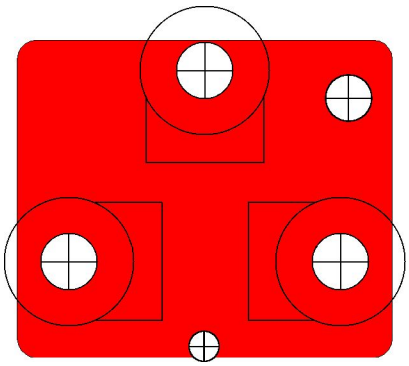

Note: Only Drill the LED hole shown above if you plan to use the status LED on the Angry Red Camel circuit board!

This drawing shows the spacing between centers of the pots, and the distance of the LED pads from the center of the pots. Hole diameters are not exact in this image, so please measure your components before selecting a drill bit. We recommend drilling the pot holes, mounting the pots in the enclosure, and then soldering the pots to the board. This approach should resolve the issue of the pots not fitting through the holes after soldering. We also recommend you make the holes for the pots a little larger than the threads in case you decide to remove the board and put it back in during the build, to avoid problems. Use this guide at your own risk. Be sure to make sure page scaling is turned off when you print this PDF, or the image above may be smaller than expected.

Soldering Tutorial on Youtube

Need a kit?

USA – Check out PedalPartsAndKits for all you needs.

Europe – Das Musikding carries both boards and kits as a sevice to our Europeans friends.

PedalPartsAustralia - Order boards and kits direct from Australia

If they do not have a KIT listed send them a note asking if they can help you out.

This document, PCB Artwork and Schematic Artwork © GuitarPCB.com. Schematic, PCB and this document by Bruce R. All copyrights, trademarks, and artworks remain the property of their owners. Red Llama™ is a trademark of Way Huge®. Distribution of this document is prohibited without written consent from GuitarPCB.com. GuitarPCB.com claims no rights or affiliation to those names or owners.