GuitarPCB.com

AfterBlaster - Build Instructions

The AfterBlaster is a cool THREE-IN-ONE circuit that provides several useful functions. It is a handy bypass footswitch wiring board with a status LED. It has a switchable boost circuit that provides a clean boost enhancement for any circuit. It can also provide a final tone balancer to attenuate the output level of any circuit. Or anything in between!

Add an extra gain stage to any circuit and more.

The DIP switches and trimmer must be installed on the opposite side of the PC board from the other components and footswitch. See the views below. The left view should be facing up when viewing the gut shot of the pedal. DIP SWITCHES are usually available in our SHOP.

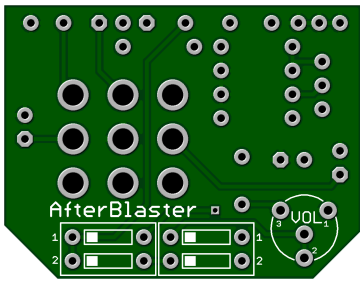

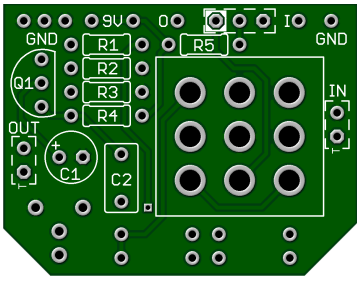

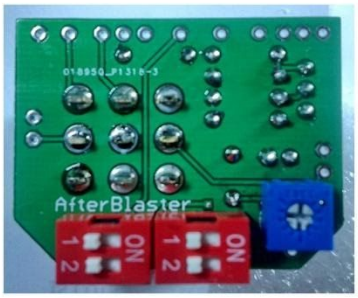

PARTS LIST

Part	Value		Part	Value
C1	22u		R3	1k
C2	220n		R4	2k4*
D1	BiColor CA LED		R5	1k8***
Q1	MPF102**		SW1	3PDT_FS_TB
R1	33k		DIP1-DIP2	2-POLE_DIP
R2	1M		TR1-Vol	A100k

Build Notes:

* **Be sure to Socket R4** – See build notes below for details. 2.4k is only an average value to get MPF102, J113 or 2N5457 close to the wanted 4.5v to 6v reading on the Drain leg of Q1. Google for the Datasheet for whatever transistor you are using.

** **Q1 - You may use a J113** (MPF102 replacement) or change to a 2N5457 for more grit, however 2N5457 will require an adjustment to the value of **R4**. Use a **DMM** and switch to **DCV.** Black Probe on ground and Red on the Drain of Q1. Adjust your **socketed R4 value** till you get a reading between 4.5v to 6v on the Drain of Q1. **This is easy but important to get the best tone.**

*** **R5** is the CLR (current limiting resistor. Adjust this value to suit for brightness. Between 1k8 and 4k7 Bright to Dim.

Dip Switch positions explained

If not using the DPDT On/On switch (seen next page) you may use a pair of Dip Switches available in the US at Small Bear

- To activate the AfterBlaster both Number 1 Switches should be in the **ON** position, and both Number 2 switches should be in the **OFF** (or facing Number 2) position.
- To bypass the AfterBlaster both Number 1 switches should be in the **OFF** (or facing the Number 1) position and the Number 2 switches should be in the **ON** position leaving you with the stock circuit.
- The Dip switches will not be functional in any other configuration. Either set both on 1 or both on 2.

SCHEMATIC

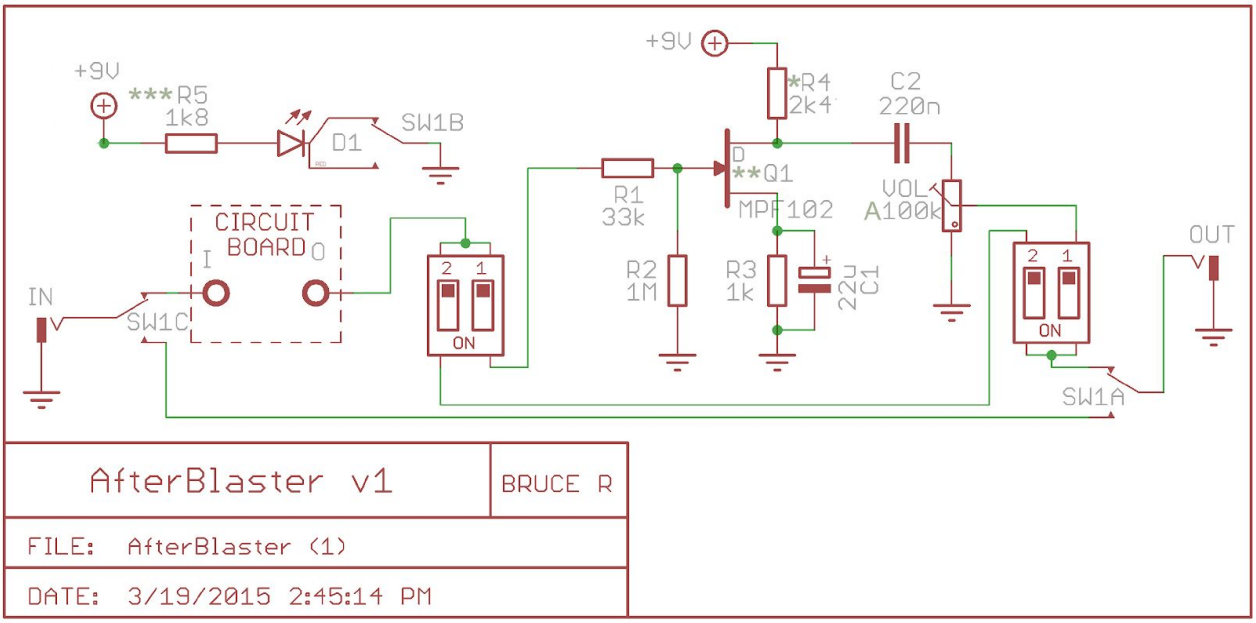

Additional Build Notes:

While 2.4k will give you desirable results, if you wish to fine tune the Bias resistor use a socket on R4 then measure the Drain voltage of Q1 and adjust the resistor to achieve the exact results you like. Remember every MPF102 is going to be different so 2.4k is a working approximation. The preferred voltage range for the Drain of Q1 to ground is between 4.5V and 5.0V. Once you find the perfect resistance you can solder it to your socket. (Again this is an optional procedure)

It is very convenient to use (4) connected socket sections and either push out the two middle pins or clip off the middle pins with wire cutters to easily solder a solid section to the board when only needing (2) sockets.

If you are having trouble determining which Dip Switch setting is After Blast and which is Bypass, just turn your Trimmer and you will hear it clearly when you have it in After Blast Position. Typical Unity setting is at about 1:00. Below that you are attenuating the circuit (which can be useful, while maintaining natural Bass loss) and anything above 1:00 will add enhancement to finally a clean Boost.

Main Circuit Board

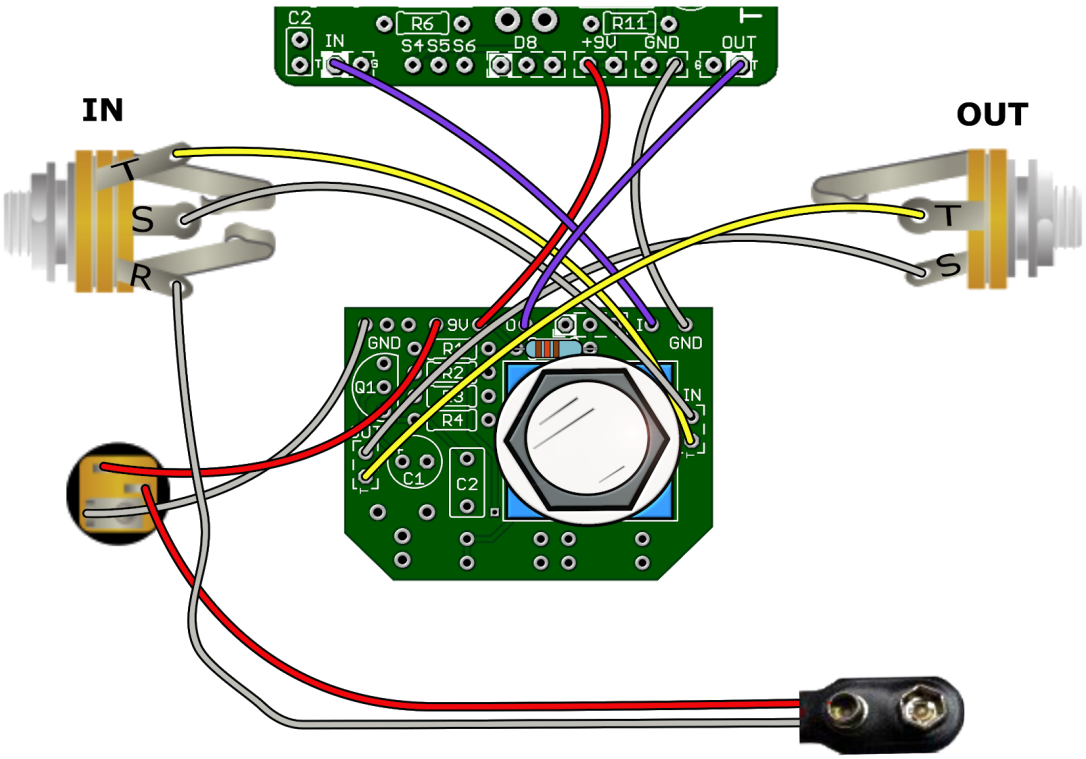

The In and Out Wiring is crossed since everything except the Main Board will be flipped over prior to installation in the enclosure. Note that the Stomp switch is mounted on this side for this reason.

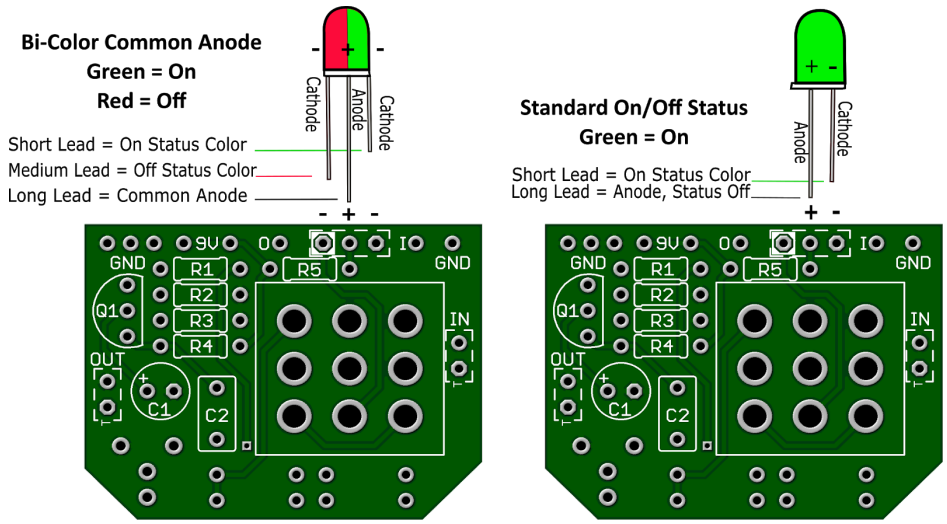

Insert the LED leads into the corresponding pads as shown above. If you wish to change the color of the On Status then simply flip the LED to change to the cathode of the color you wish to use. R5 is the Current Limiting Resistor. Use a value from 1k8 to 4k7.

TIP: Use a 3v to 5v coin battery to test your LED before installing. Note: 9v direct will blow the LED.

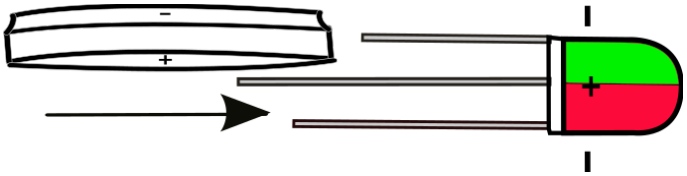

Mod:

**Aside from using the on-board Dip Switch and Trimmer (some people prefer the set and forget method) you may use a DPDT switch and potentiometer for mounting on the outside of the enclosure. Keep in mind that the potentiometer should be at roughly 2:00 for unity gain and higher for boost and clarity. It can also be used to cut the volume as well below 2:00 if needed.

Another Mod is to install a 2N5457 for a bit more grit when turning it up than a cleaner MPF102 will provide. As usual Bias from 4.5v to 6v. to suit your rig and ears. You will need to socket R4 and find the correct resistor.

If you wish to try a J201 (even more available grit) you will have to socket and adjust R1 and increase as well as possibly socketing R4 and adjusting till you can attain in roughly 4.5v to 6v. on the Drain leg of each transistor.

As always "socket and see" what you like. When using sockets this allows you to easily make changes without ruining the board by desoldering etc...

DPDT and Potentiometer Mod with video demo:

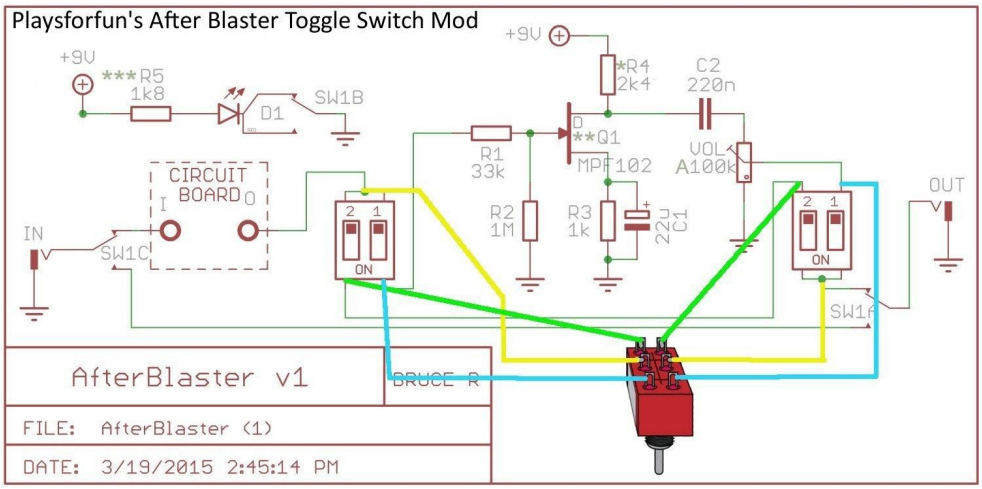

After Blaster Toggle Switch Mod

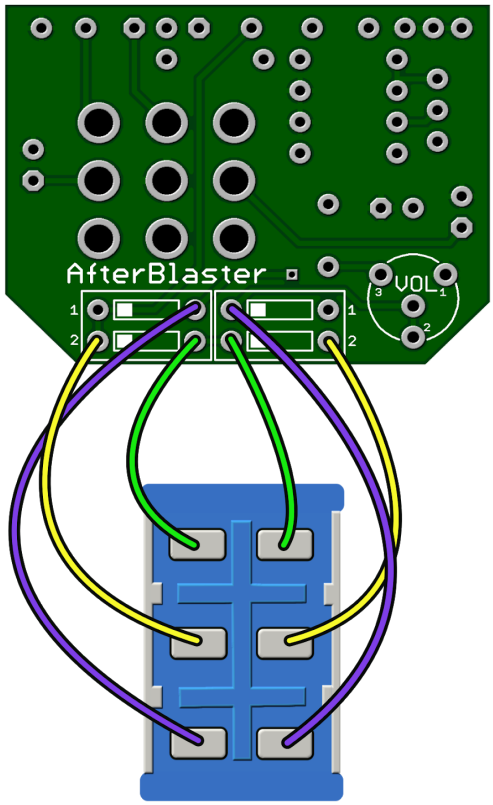

DPDT On/On

Instead of using a trimmer try mounting a Pot to control the volume of the added Gain Stage outside the enclosure.

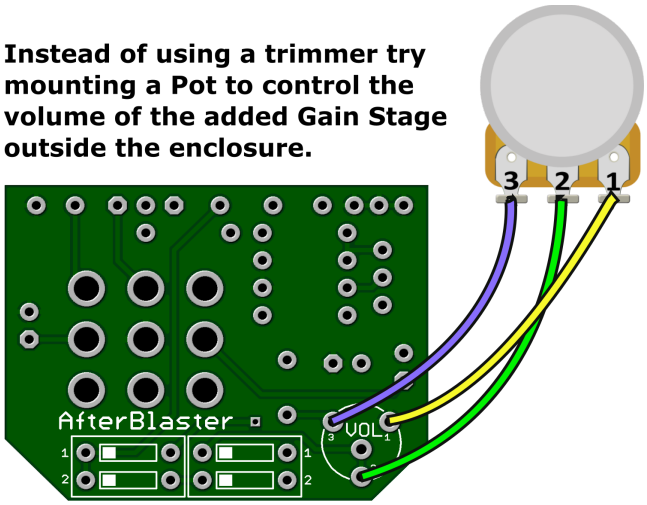

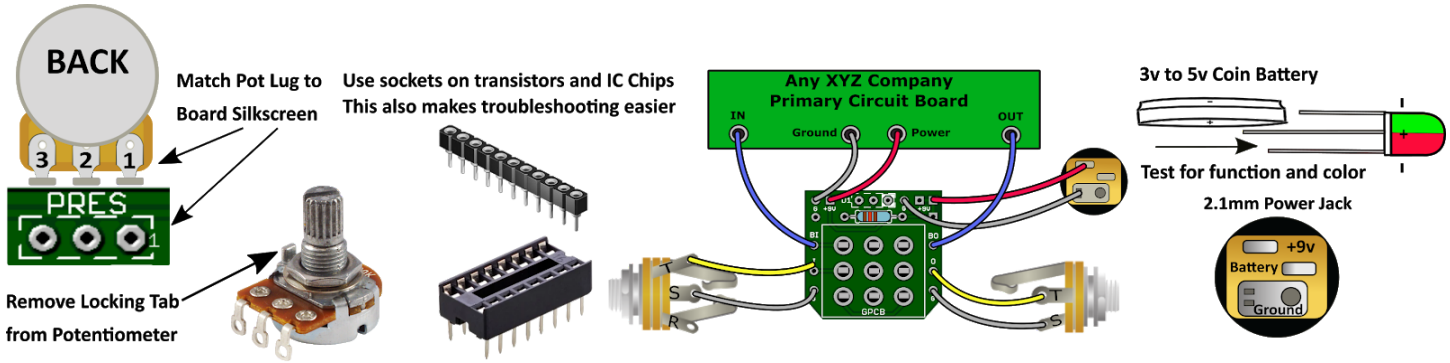

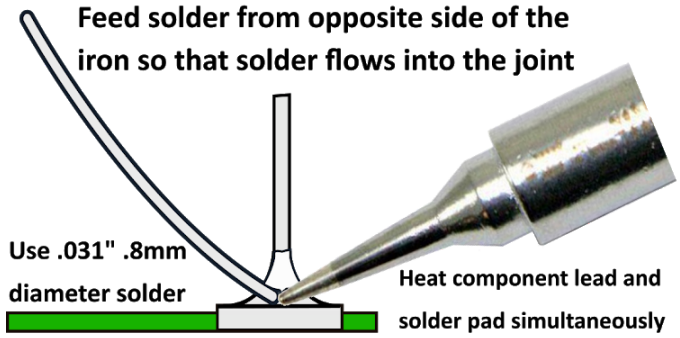

A good solder joint should be shiny and look like this:

* Carefully re-flow suspect solder joints.
* Clean and tin your Tip regularly.

When soldering wire to the board push the protective PVC jackect flush with the board and pad.

Use the right tools for the job and be patient.
If you need help ask questions first at the GuitarPCB forum.
We are there to help and we know our products best.

Need a kit?

USA – Check out PedalPartsAndKits for all your needs.
Europe – Das Musikding carries both boards and kits as a service to our Europeans friends.
Australia - PedalPartsAustralia.com carries GuitarPCB Boards and Kits direct.
If they do not have a KIT listed send them a note asking if they can help you out.

Soldering Tutorial on Youtube

Before beginning any build or if you have questions please see our Guides Page on our site. The Guides Page is located in the Main Menu Bar of most pages. Also we have a dedicated forum for questions about your build.

This document, PCB, Artwork and Schematic Artwork © GuitarPCB.com. Schematic and PCB design by Bruce R and Barry. Build Document by Barry. All copyrights, trademarks, and artworks remain the property of their owners. Distribution of this document is prohibited without written consent from GuitarPCB.com.