Anxiety Disorder Drive

Based on a drive of a <u>different disorder</u> this one will pick you up with its unique clipping arrangement using Mosfet technology. Further we have enhanced the Tone section with our Tone Centralizer design. This will yield the traditional dark and soft tones of the original and additionally allow you to dial in much sought-after brighter tones.

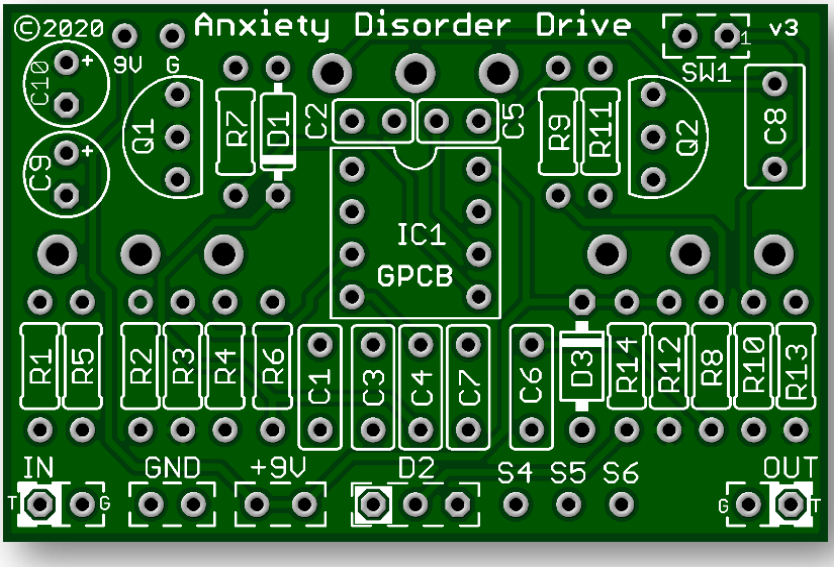

Board Dimensions (W x H) 1.95” x 1.26”.

R1	1M	C1	10n	IC1	TL072
R2	10k	C2	220p		
R3	470k	C3	100n	Q1	2N7000
R4	2k2	C4	10n	Q2	2N7000
R5	22k	C5	220p		
R6	10k	C6	100n	D1	1N34A
R7	10k	C7	100n	D2	CA Bi-color LED
R8	22k	C8	100n	D3	1N4001
R9	100k	C9	47µ		
R10	22k	C10	47µ	GAIN	B1M
R11	1k			TONE	B10k
R12	22k			VOLUME	A500k
R13	22k				
*R14	1k8 to 4k7			SW1	SPST or SPDT

Mod:

If you would like even brighter tones socket and decrease the value of C4, down to 1nF should be enough.
***R14 is the current limiting resistor for the Status LED. The lower the value the brighter the LED.**
SW1 switch can be a SPDT or SPDT. If using SPDT then simply use either outer lug and the center lug.
SW1 acts as a Boost which can be modified to preference. Try R10-33k / R11-10k for less boost effect. This effect for me is great as a quick Volume change when changing guitars from “Hot” Pickups to guitars using “Vintage” wound.

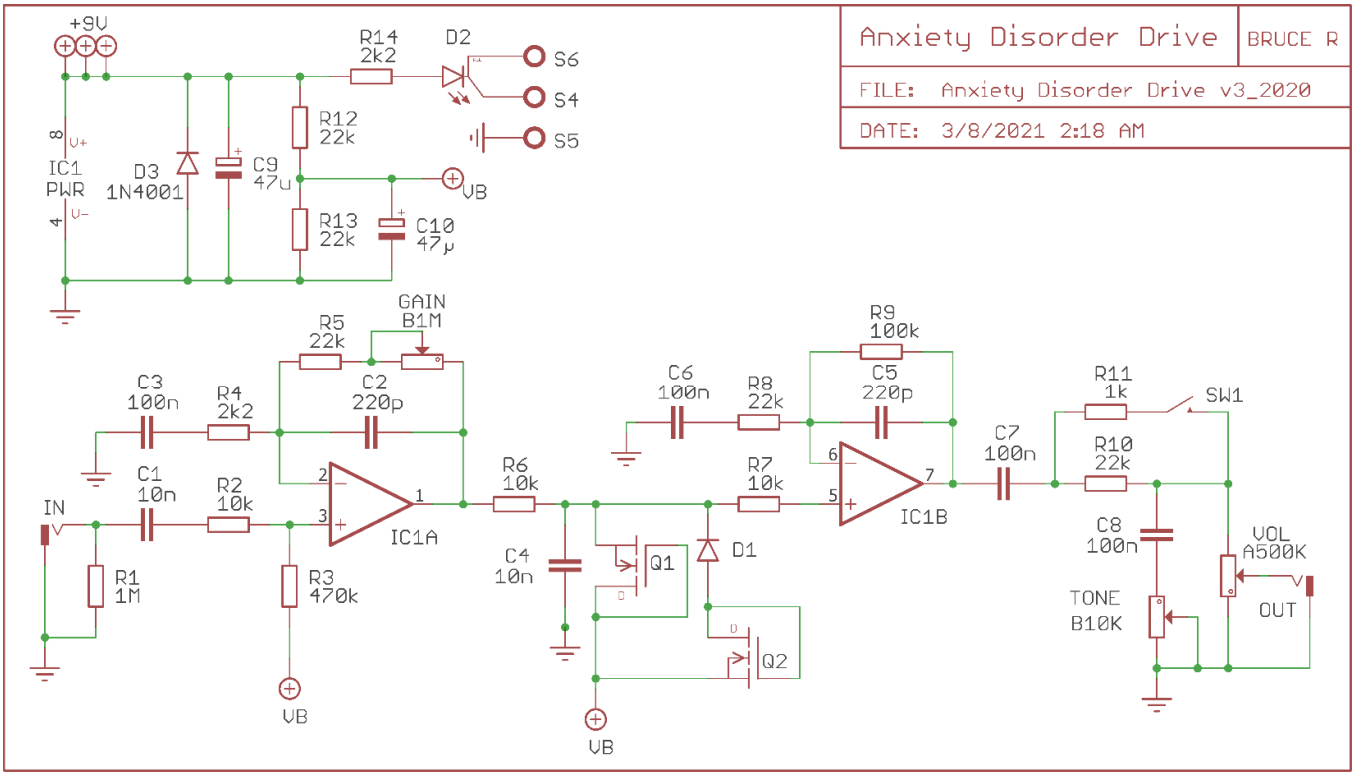

WIRING

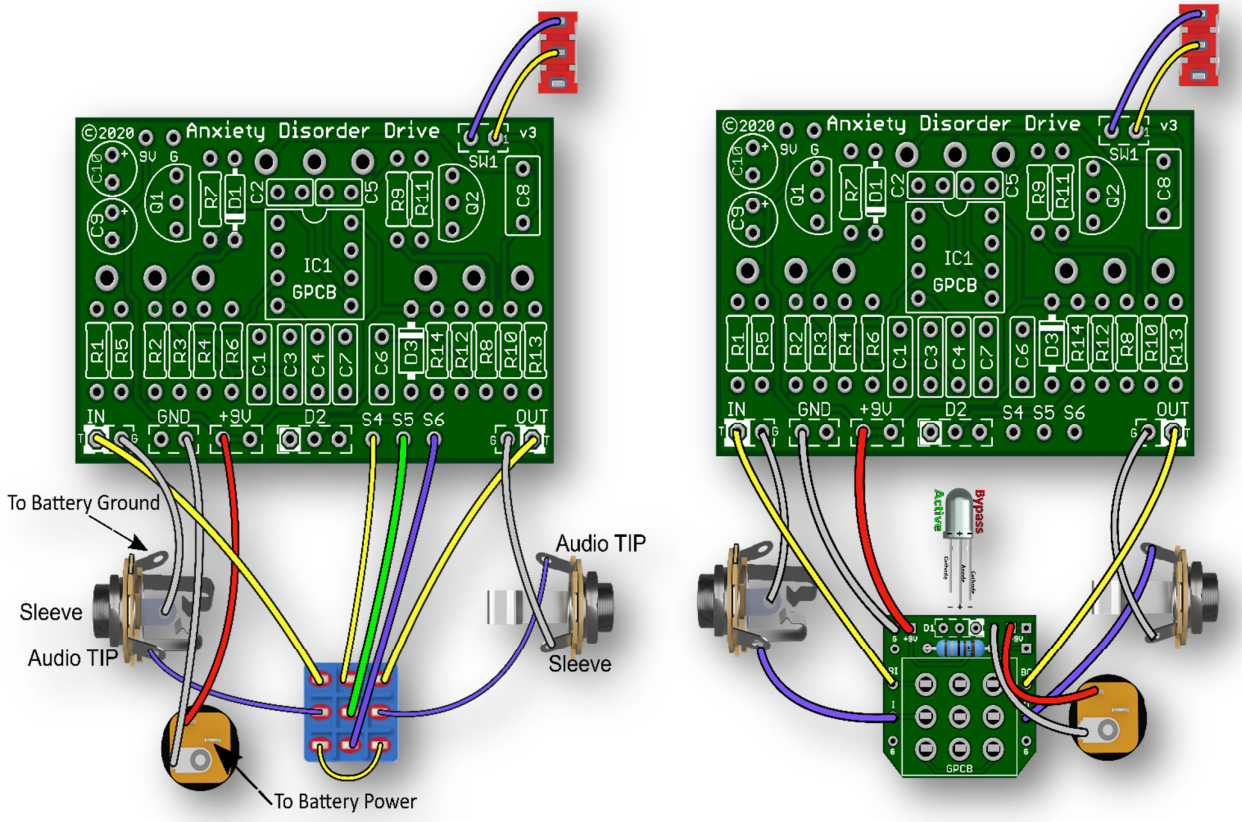

Be sure your In/Out Jack wiring is correct. A Stereo Jack (for battery use only) has a RING lug which is used to connect to the battery ground. If you do not intend to use a battery there is no need for a Stereo Jack. If using Stereo then only use the Tip and Sleeve lugs. S4, S5 & S6 is only needed when the LED is wired to the Main Board.

If using our convenient 3PDT Wiring Boards (below) here is an LED wiring guide. You may use Common Anode Bi-Color or Standard On/Off. The wiring boards use the same symmetrical layout as if wiring straight to the switch.

STATUS LED

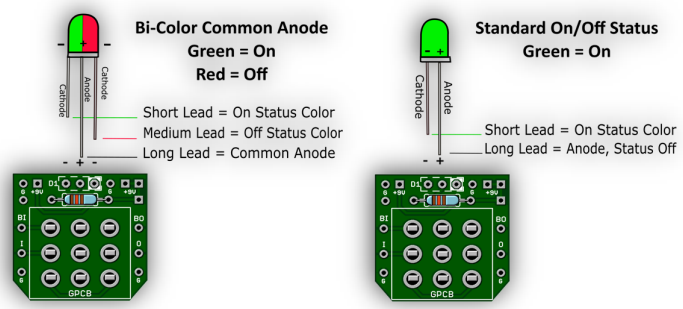

Note: If wiring the LED to our 3PDT board there is no need to connect S4, S5 & S6 or populate D2 and *R14 (CLR) on the main board since you are wiring the LED & CLR (current limiting resistor) directly to our wiring board instead.

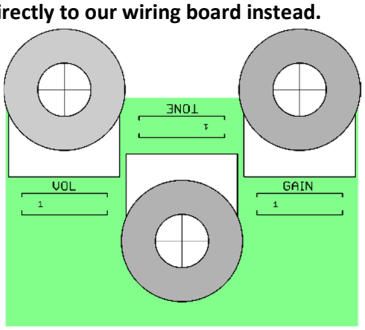

Drill Tips: Measure your components before selecting a drill bit. We recommend drilling the pot holes, mounting the pots in the enclosure, and then soldering the pots to the board. This approach resolves any issue of pots not fitting through the holes after soldering. We also recommend you make the holes for the pots a little larger than the threads in case you decide to remove the board and put it back in during the build, to avoid problems. Use this guide at your own risk. Make sure page scaling is turned off when you print this PDF, or the image above may be smaller than expected. Verify everything before drilling.

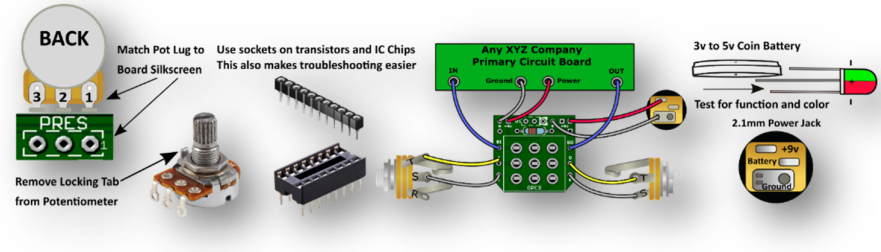

Need a kit? Check out our authorized worldwide distributors:

USA – Check out PedalPartsAndKits for all your GuitarPCB kit needs in the USA.

Europe – Das Musikding Order either boards or kits direct from Europe.

PedalPartsAustralia - Order either boards or kits direct from Australia

This document, PCB Artwork and Schematic Artwork © GuitarPCB.com. Schematic, PCB and this document by Tonmann, Bruce R. and Barry. All copyrights, trademarks, and artworks remain the property of their owners. Distribution of this document is prohibited without written consent from GuitarPCB.com. GuitarPCB.com claims no rights or affiliation to those names or owners.