ADD VERB

ADD VERB from slap back-style delay to natural room reverb and far beyond! Thanks to the BTDR-3 Reverb Brick and tone control by Culturejam, this circuit allows you to add quality reverb to any amplifier at the stomp of a switch.

Considering the superb effect from such a simple circuit, everyone at GuitarPCB agreed this is a real winner!

The four controls are: Volume, Reverb, Tone and Decay. Everything needed for a perfect reverb tone!

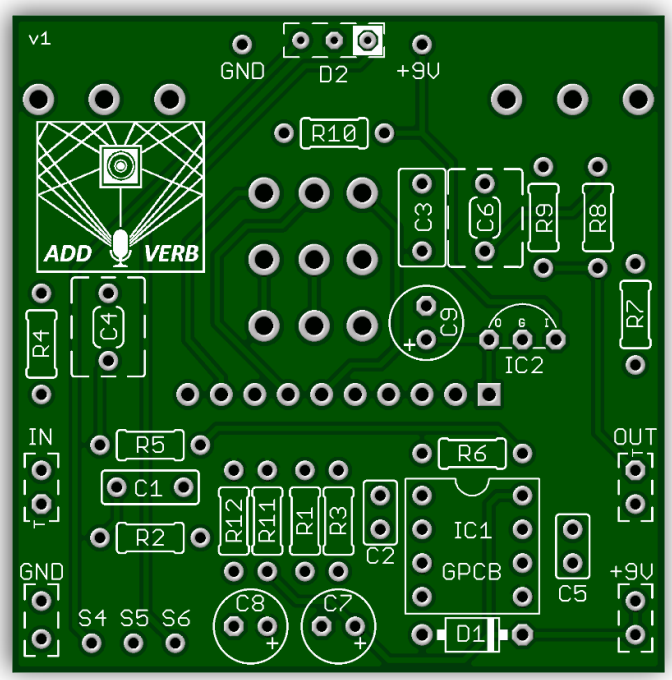

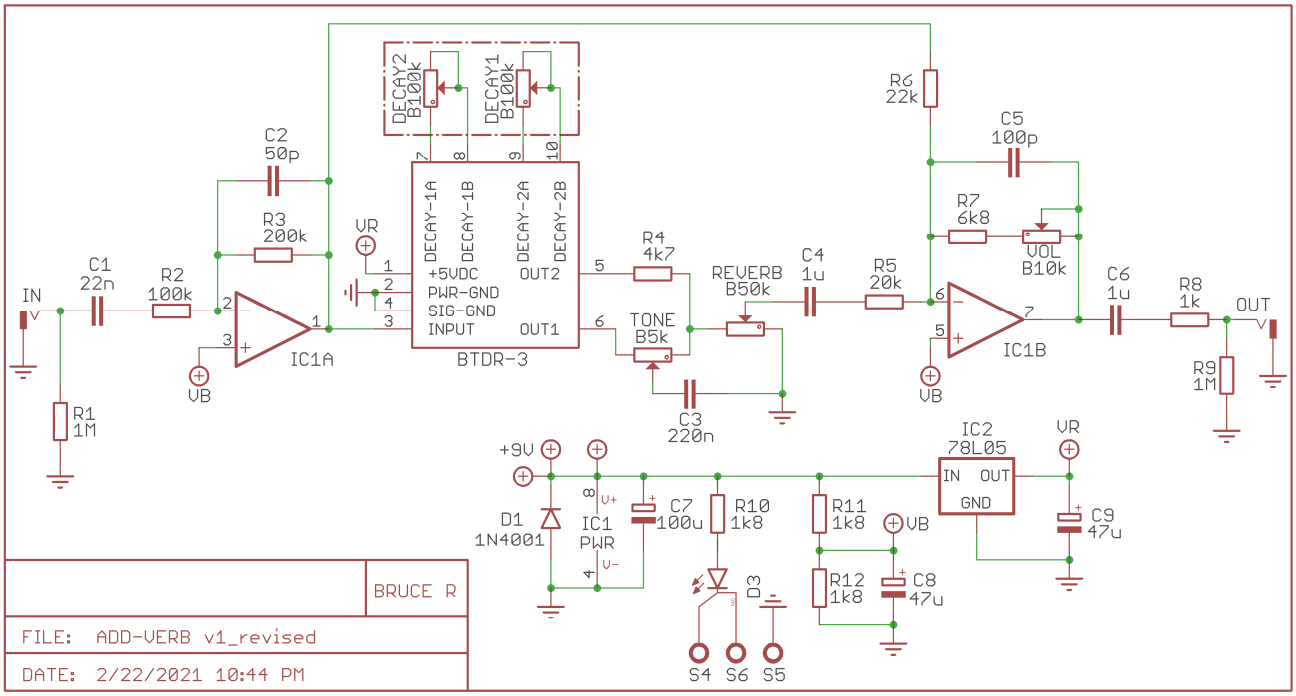

Build Notes: The BTDR-3H should be <u>soldered last</u> as it will cover the underside of the PCB. Make sure you have double checked all component values, orientations and solder joints first before soldering in the BTDR-3H.

Bill of Materials

Part	Value	Part	Value	Part	Value
R1	1M	R12	1k8	REVERB	B50k
R2	100k			TONE	B5k
R3	200k	C1	22n	VOL	B10k
R4	4k7	C2	50p	DECAY	B100k Dual Gang
R5	20k	C3	220n	BTDR-3H	BTDR-3H Brick
R6	22k	C4	1u		
R7	6k8	C5	100p	IC1	TL072
R8	1k	C6	1u	IC2	78L05
R9	1M	C7	100u		
R10	1k8	C8	47u	D1	1N4001
R11	1k8	C9	47u	D2	LED Bicolor CA

Additional Build Notes

BTDR-3H Reverb Brick may be purchased in the USA at Amplified Parts or Google. Das Musikding in Europe.
D1 is a reverse polarity protection. **D2** is an option to use the board to hold the Bi-color status LED.
R10 – Current Limiting Resistor for on-board Bi-color LED. This may be adjusted to 4k7 for a dimmer light.
MOD: The Dual Gang 100kB Decay potentiometer allows for the maximum decay. If you want tighter control with shorter, more natural decay lengths you can use a dual gang 10kB instead. **You must use a Dual Gang Potentiometer.**

Be sure your In/Out Jack wiring is correct. A Stereo Jack (for battery use only) has a RING lug which is used to connect to the battery ground. If you do not intend to use a battery there is no need for a Stereo Jack.
If using Stereo then only use the Tip and Sleeve lugs.

If using our convenient 3PDT Wiring Boards (below) here is an LED wiring guide. You may use Common Anode Bi-Color or Standard On/Off. The wiring boards use the same symmetrical layout as if wiring straight to the switch.

STATUS LED

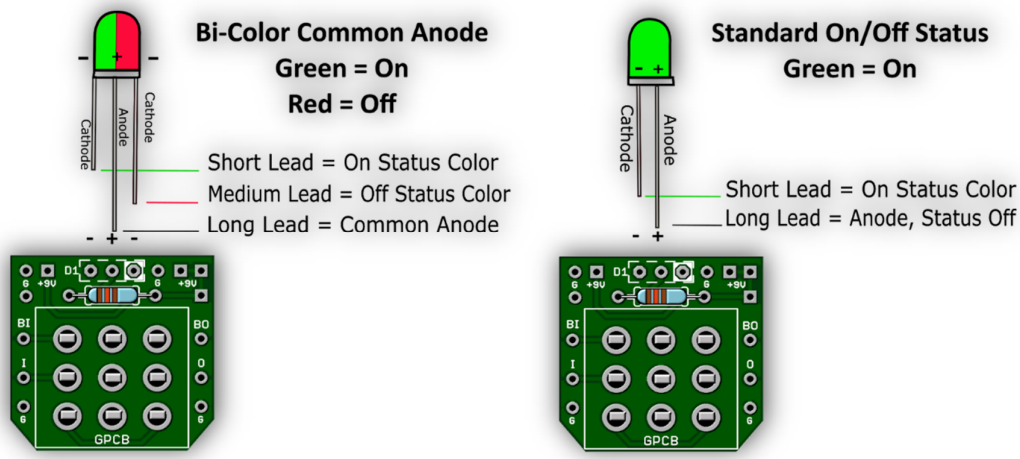

Note: If wiring the LED to our 3PDT board no need to connect S4, S5 & S6 or populate D2 or R10 (CLR) on the main board since you are wiring your LED directly to our board.

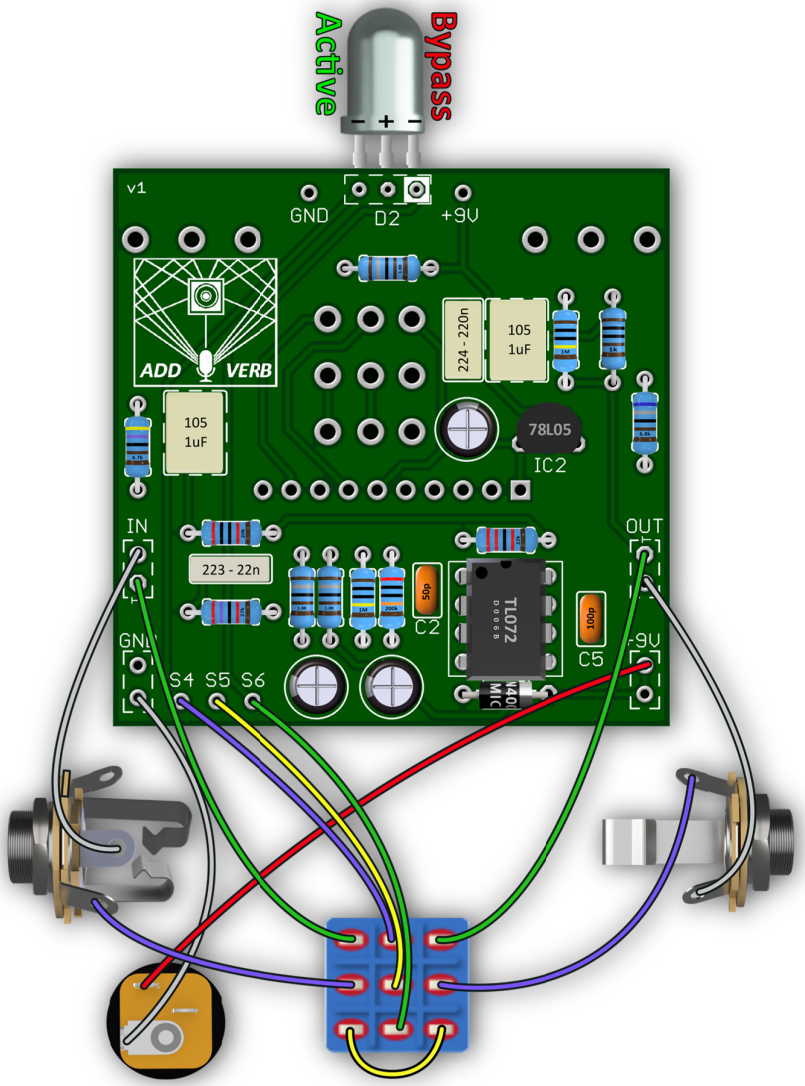
Active
Bypass
v1
GND
D2
+9V
ADD
VERB
224 - 220n
105
1uF
78L05
IC2
IN
OUT
223 - 22n
50p
C2
TL072
100p
C5
GND
-9V
S4 S5 S6

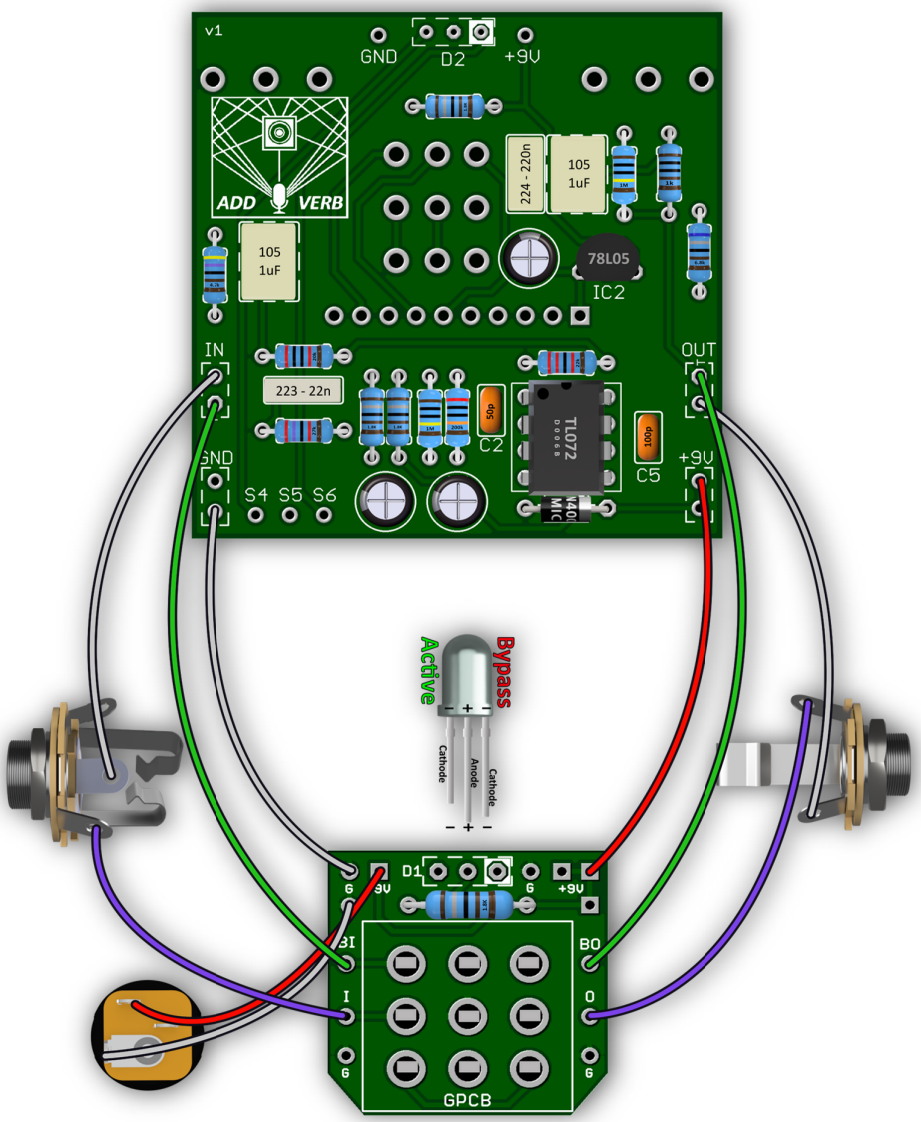
v1
GND
D2
+9V
ADD
VERB
224 - 220n
105
1uF
78L05
IC2
IN
OUT
223 - 22n
50p
C2
TL072
100p
C5
GND
+9V
S4 S5 S6
Active
Bypass
Cathode
Anode
Cathode
D1
+9V
BI
BO
I
O
GPCB

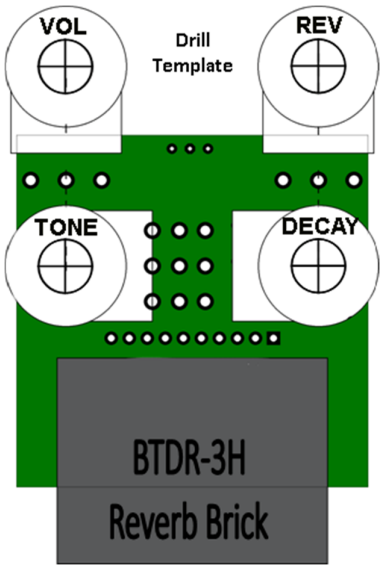

Cut out for drill template (Be sure to match with your board)
Be careful. Drill enclosures safely and at your own risk.

Drill Tips: Measure your components before selecting a drill bit. We recommend drilling the pot holes, mounting the pots in the enclosure, and then soldering the pots to the board. This approach should resolve the issue of the pots not fitting through the holes after soldering. We also recommend you make the holes for the pots a little larger than the threads in case you decide to remove the board and put it back in during the build, to avoid problems. Use this guide at your own risk. Make sure page scaling is turned off when you print this PDF, or the image above may be smaller than expected. Verify everything before drilling.

If you are using top mount In/Out Jacks we suggest Switchcraft #111 can also be purchased from Small Bear like the 16mm Right Angle On-Board Potentiometers. If you want side jacks try P.P.A.K.'s Mini Open Jacks.
We recommend drilling Pot holes 5/16" minimum or 8mm to allow an easier fit of the Potentiometers.

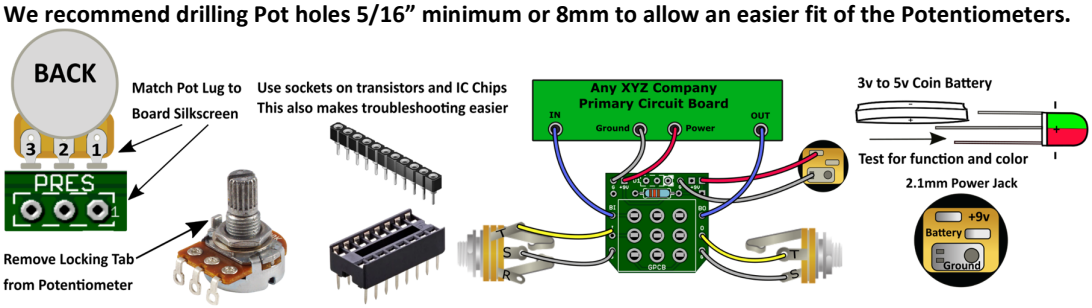

Soldering Tutorial on Youtube

Need a kit? Check out our authorized worldwide distributors:

USA – Check out PedalPartsAndKits for all your GuitarPCB kit needs in the USA.

Europe – Das Musikding Order either boards or kits direct from Europe.

PedalPartsAustralia - Order either boards or kits direct from Australia

If they do not have a KIT listed send them a note asking if they can help you out.

This document, PCB Artwork and Schematic Artwork © GuitarPCB.com. Schematic, PCB and this document by Bruce R. Tonmann Wilkie1 and Barry. All copyrights, trademarks, and artworks remain the property of their owners. Distribution of this document is prohibited without written consent from GuitarPCB.com. GuitarPCB.com claims no rights or affiliation to those names or owners.